Parts Needed:

CON00487 - 7 Pin Connector

KIT02866 - (Ten Wires per Kit, you will only need two wires per unit.

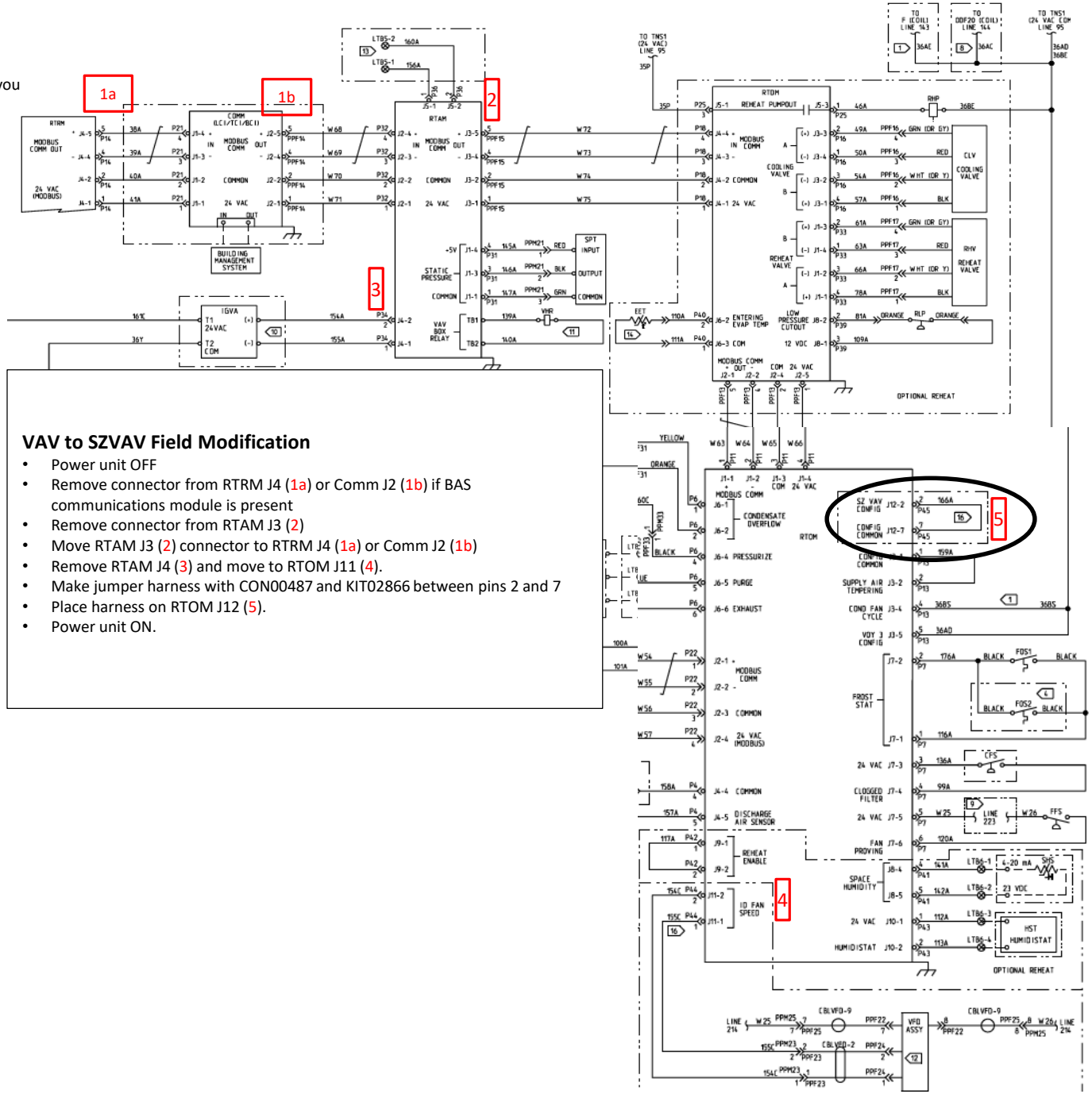

VAV to SZVAV Field Modification

- Power unit OFF
- Remove connector from RTRM J4 (1a) or Comm J2 (1b) if BAS communications module is present
- Remove connector from RTAM J3 (2)
- Move RTAM J3 (2) connector to RTRM J4 (1a) or Comm J2 (1b)
- Remove RTAM J4 (3) and move to RTOM J11 (4).
- Make jumper harness with CON00487 and KIT02866 between pins 2 and 7
- Place harness on RTOM J12 (5).
- Power unit ON.