UNLESS OTHERWISE SPECIFIED ALL DIMENSIONS ARE IN INCHES. TOLERANCE:

FINISH ✓

ANGLES ± HOLE DIA ±

CONFORMS TO ASME Y14.5M-1994

DO NOT SCALE PRINT

45' BASE

SHEET 1 OF 1

RTAC

37FT HIGH/45OT STD & HIGH

40FT HIGH

50FT STD

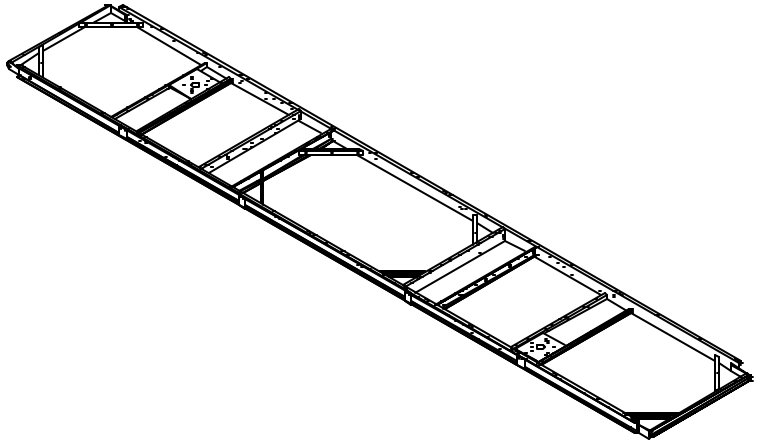

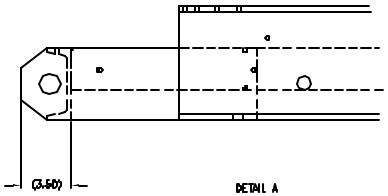

DETAIL A

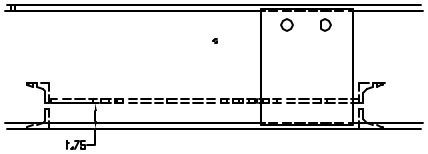
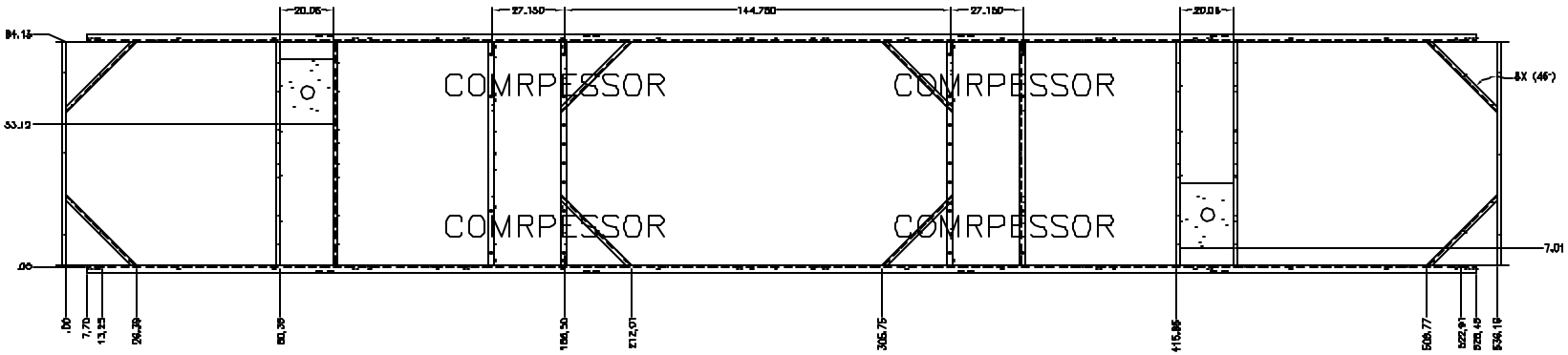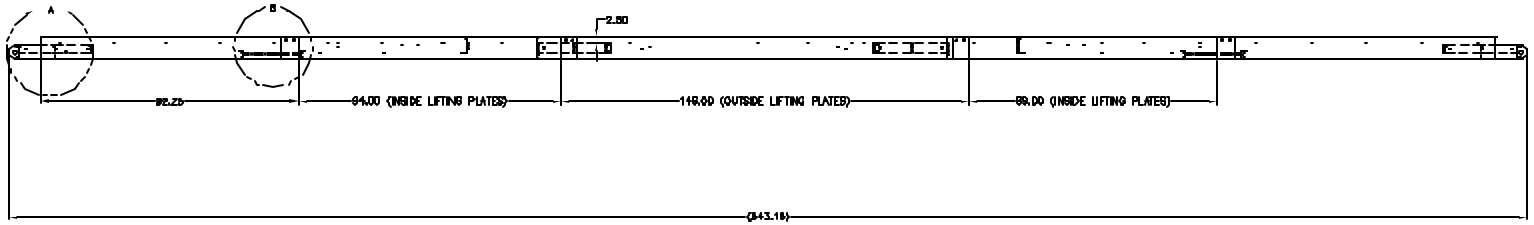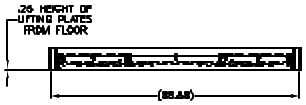
DETAIL B