RELEASED 27/Jun/2023 12:37:30 GMT

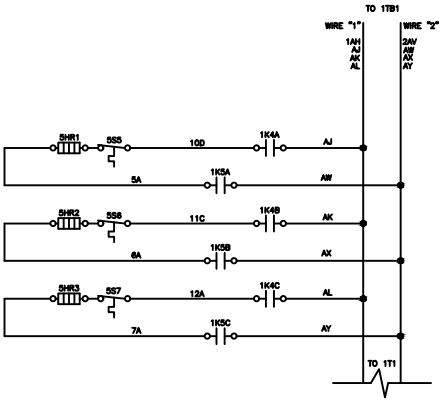

HIGH VOLTAGE ELECTRIC HEAT WIRING

HIGH VOLTAGE WIRING SELECTION			
COIL	CFM	VOLT	KW
V	300,400,600	2,3,4,9	3.0
V	600	2,3,4,9	4.5
V	800	2,3,4,9	3.0 – 6.0
V	100	2,3,4,9	3.0 – 7.5
V	120	2,3,4,9	3.0 – 9.0
U	200	2,3,4,9	3.0
U	300	2,3,4,9	6.0
U	400	2,3,4,9	7.5
N	200	2,3,4,9	3.0
N	300	2,3,4,9	6.0
N	400	2,3,4,9	7.5

UC400–B/SYMBIO 400–B LOW VOLTAGE ELECTRIC HEAT WIRING.

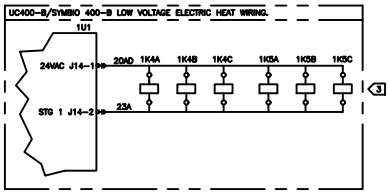

INSET "A" ZN OR CSTI LOW VOLTAGE ELECTRIC HEAT WIRING

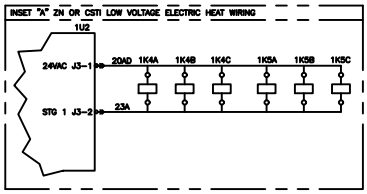

LOW VOLTAGE WIRING SELECTION				
COIL	CFM	VOLT	KW	CTYP
V	300,400,600	2,3,4,9	3.0	L,M,R,T
V	600	2,3,4,9	4.5	L,M,R,T
V	800	2,3,4,9	3.0 – 6.0	L,M,R,T
V	100	2,3,4,9	3.0 – 7.5	L,M,R,T
V	120	2,3,4,9	3.0 – 9.0	L,M,R,T
N	200	2,3,4,9	3.0	L,M,R,T
N	300	2,3,4,9	6.0	L,M,R,T
N	400	2,3,4,9	7.5	L,M,R,T

LOW VOLTAGE WIRING SELECTION				
COIL	CFM	VOLT	KW	CTYP
V	300,400,600	2,3,4,9	3.0	E,F,H,N
V	600	2,3,4,9	4.5	E,F,H,N
V	800	2,3,4,9	3.0 – 6.0	E,F,H,N
V	100	2,3,4,9	3.0 – 7.5	E,F,H,N
V	120	2,3,4,9	3.0 – 9.0	E,F,H,N
N	200	2,3,4,9	3.0	E,F,H,N
N	300	2,3,4,9	6.0	E,F,H,N
N	400	2,3,4,9	7.5	E,F,H,N

UC400–B/SYMBIO 400–B LOW VOLTAGE ELECTRIC HEAT WIRING.

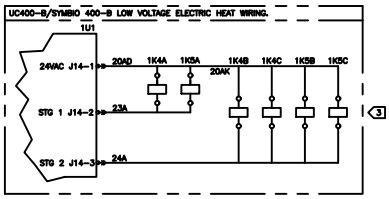

INSET "B" ZN OR CSTI LOW VOLTAGE ELECTRIC HEAT WIRING

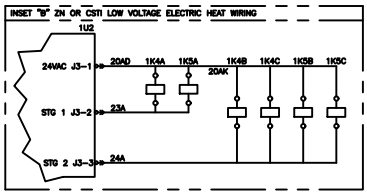

LOW VOLTAGE WIRING SELECTION				
COIL	CFM	VOLT	KW	CTYP
U	200	2,3,4,9	3.0	L,M,R,T
U	300	2,3,4,9	6.0	L,M,R,T
U	400	2,3,4,9	7.5	L,M,R,T

LOW VOLTAGE WIRING SELECTION				
COIL	CFM	VOLT	KW	CTYP
U	200	2,3,4,9	3.0	G
U	300	2,3,4,9	6.0	G
U	400	2,3,4,9	7.5	G

DEVICE PREFIX LOCATION CODE	
AREA	LOCATION
1	CONTROL PANEL
2	CONTROL END
3	PIPING END
4	FAN SECTION
5	COIL SECTION
6	CUSTOMER INSTALLED
7	FIELD SUPPLIED DEVICE

LEGEND		
DEVICE DESIGNATION	DESCRIPTION	LINE NUMBER
1K4A	ELECTRIC HEAT RELAY	229,251,264
5S5	EH AUTO & ONESHOT CUTOFF	229
5HR1	ELECTRIC HEAT ELEMENT	229
1K5A	ELECTRIC HEATER ELEMENT	230,251,264
1K4B	ELECTRIC HEAT RELAY	231,251,265
5S6	EH AUTO & ONESHOT CUTOFF	231
5HR2	ELECTRIC HEATER ELEMENT	231
1K5B	ELECTRIC HEAT RELAY	233,251,265
1K4C	ELECTRIC HEAT RELAY	234,251,265
5S7	EH AUTO & ONESHOT CUTOFF	234
5HR3	ELECTRIC HEATER ELEMENT	234
1K5C	ELECTRIC HEAT RELAY	236,251,265
1U1	UC400–B/SYMBIO 400–B	249,262
1U2	CSTI/ ZN ADAPTER BOARD	249,262

NOTES (SHEET FOUR):

1. NUMBERS ALONG THE LEFT SIDE OF SCHEMATIC DESIGNATE THE LOCATION OF COMPONENTS BY LINE NUMBER.
2. UNITS WITH ELECTRIC HEAT WILL NOT OPERATE BELOW MINIMUM REQUIRED CFM.
3. WIRING SHOWN IS FOR UC400–B/SYMBIO 400–B (CTYP = L,M,R,T). SEE INSETS "A" ZN010, ZN510 OR CSTI (CTYP=E,F,H,N) OR "B" FOR ZN520 (CTYP=G).
4. NOT ALL VOLTAGES, CFM'S AND KW'S ARE ALLOWED TOGETHER.

VOLTAGE CHART				
DIGIT	DIGIT VALUE	DESCRIPTION	WIRE "1"	WIRE "2"
VOLT	2	208V/60HZ/1PH	L1 (BLK)	L2 (BLK)
VOLT	3	277V/60HZ/1PH	L1 (BLK)	N (WHT)
VOLT	4	230V/60HZ/1PH	L1 (BLK)	N (WHT)
VOLT	9	220–240/50/1	L1 (BLK)	L2 (BLK)

REVISIONS	
REVISION	REVISION DATE

DRAWN BY: K. GRIGSBY
DATE: 05–SEPT–2022

TRANE

SIMILAR TO: 6mxx

2311–4704

SCHEMATIC DIAGRAM
FORCEFLO
ELECTRIC HEAT WITH PARALLEL CIRCUITS, 1 AND 3 ELEMENT

REV