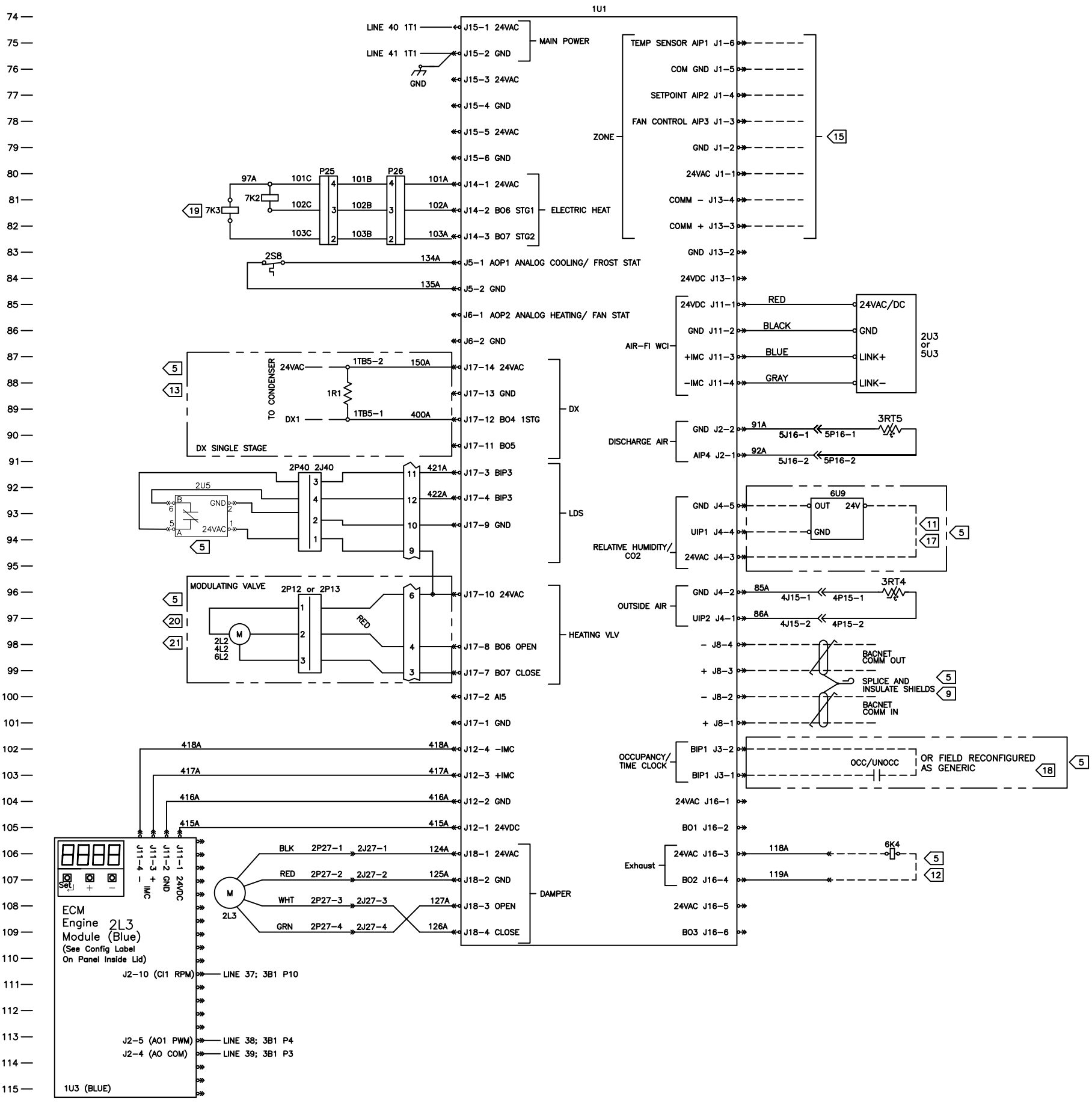

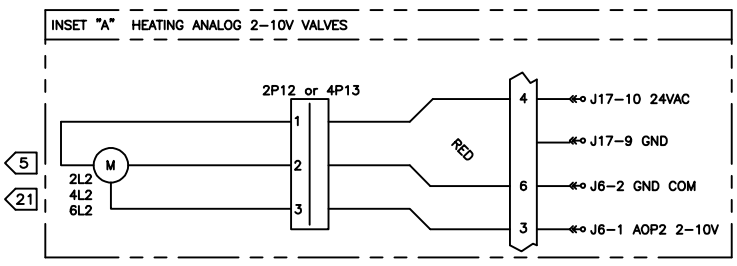

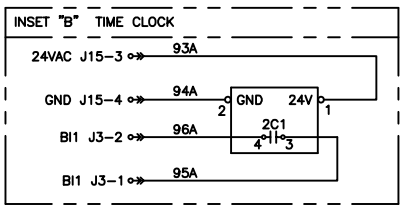

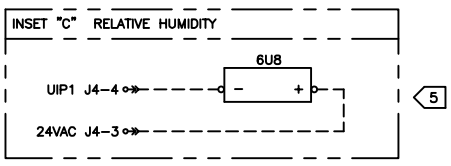

DEVICE PREFIX LOCATION CODE	
AREA	LOCATION
1	LH CONTROL PANEL
2	LH END POCKET
3	AIR SECTION
4	RH END POCKET
5	TOP ACCESS PANEL
6	FIELD INSTALLED
7	RH CONTROL BOX E-HT

NOTES:

1 UNLESS OTHERWISE NOTED, ALL SWITCHES ARE SHOWN AT 25° C (77° F), AT ATMOSPHERIC PRESSURE, AT 50% RELATIVE HUMIDITY, WITH ALL UTILITIES TURNED OFF, AND AFTER A NORMAL SHUTDOWN HAS OCCURRED.

2 DASHED LINES INDICATE RECOMMENDED FIELD WIRING BY OTHERS. DASHED LINE ENCLOSURES AND/OR DASHED DEVICE OUTLINES INDICATE COMPONENTS PROVIDED BY THE FIELD. PHANTOM LINED ENCLOSURES INDICATE ALTERNATE CIRCUITRY OR AVAILABLE SALES OPTIONS. SOLID LINES INDICATE WIRING BY TRANE CO.

4 ALL FIELD WIRING MUST BE IN ACCORDANCE WITH THE NATIONAL ELECTRIC CODE (NEC), STATE AND LOCAL REQUIREMENTS. ALL FIELD WIRING MUST HAVE AN INSULATION VOLTAGE RATING THAT EQUALS OR EXCEEDS UNIT RATED VOLTAGE

5 USE CLASS 2 WIRING.

9 COMUNICATION WIRE MUST BE TRANE PART NO. 400-20-28, OR WINDY CITY OR CONNECT AIR "LEVEL 4" CABLE. MAXIMUM OF 4500 FOOT AGGREGATE RUN. CAUTION! DO NOT RUN POWER IN THE SAME CONDUIT OR WIRE BUNDLE WITH COMUNICATION LINK. FOR ADDITIONAL INFORMATION REFER TO EMTX-EB-68.

11 CONFIGURE THE CO2 SENSOR FOR 4-20mA OPERATION USING THE OUT2 JUMPER SUPPLIED WITH SENSOR.

12 FOR WIRED POWER EXHAUST, 24VAC 12VA MAXIMUM.

13 FIELD INSTALLED CONDENSING UNIT CAN BE WIRED BETWEEN TERMINALS 1TB5-1 AND 1TB5-2 FOR STAGE 1. REMOVE RESISTOR 2R1 PRIOR TO WIRING CONDENSER. DX1 OUTPUTS RATED FOR 24 VAC 6VA MAXIMUM.

15 SEE SHEET 2311-4171 FOR ZONE SENSOR CONNECTIONS.

17 WIRING SHOWN IS FOR CO2 SENSOR. SEE INSET "C" FOR RELATIVE HUMIDITY SENSOR.

18 WIRING SHOWN IS FOR OCCUPIED/ UNOCCUPIED. SEE INSET "B" FOR TIMECLOCK CONNECTIONS.

19 SEE ELECTRIC HEAT SCHEMATIC PAGE FOR ADDITIONAL ELECTRIC HEAT WIRING.

20 WIRING SHOWN IS FOR MODULATING VALVE SECTION. SEE INSET "A" FOR HEATING 2-10V VALVE SELECTIONS.

21 FIELD SUPPLIED ACTUATOR WIRING UTILIZES THE SAME CONNECTION POINTS AS FACTORY ACTUATOR WIRING.

LEGEND		
DEVICE DESIGNATION	DESCRIPTION	LINE NUMBER
1U1	UC400-B, SYMBIO 400-B	74
1U3	ENGINE BOARD	115
7K2	ELECTRIC HEAT CONTACTOR	81
7K3	ELECTRIC HEAT CONTACTOR	82
2S8	FROSTSTAT	84
2U3	WIRELESS COM INTERFACE	86
5U3	WIRELESS COM INTERFACE	86
1R1	RESISTOR; DX STG 1 TEST	89
3RT5	DISCHARGE AIR TEMP SNSR	90
6U9	CO2 SENSOR	92
2L2	HEATING COIL VALVE	94,121
4L2	HEATING COIL VALVE	94,121
6L2	FIELD INSTALLED HTG CL VLV	94,121
3RT4	OUTSIDE AIR TEMP SENSOR	96
2S9	FREEZE-STAT	98
3RT3	ENTERING WATER TEMP SNSR	100
6K4	EXHAUST RELAY	106
2L3	OA DAMPER ACTUATOR	107
2C1	TIMECLOCK	120
6U8	ZONE HUMIDITY SENSOR	126
2U5	LEAK DETECTION SENSOR	92

REPLACES

REVISION DATE

DRAWN BY G. HUDGINS

DATE 06-FEB-2025

SIMILAR TO

THE DRAWING IS PROPRIETARY AND SHALL NOT BE COPIED OR USE FOR ANY PURPOSE WITHOUT THE WRITTEN CONSENT OF THE TRANE COMPANY
© TRANE

TRANE

4619-4966

SCHEMATIC DIAGRAM
UC400-B, SYMBIO 400-B
DX COILS WITH A2L
HORIZONTAL UNIT VENT

REV B