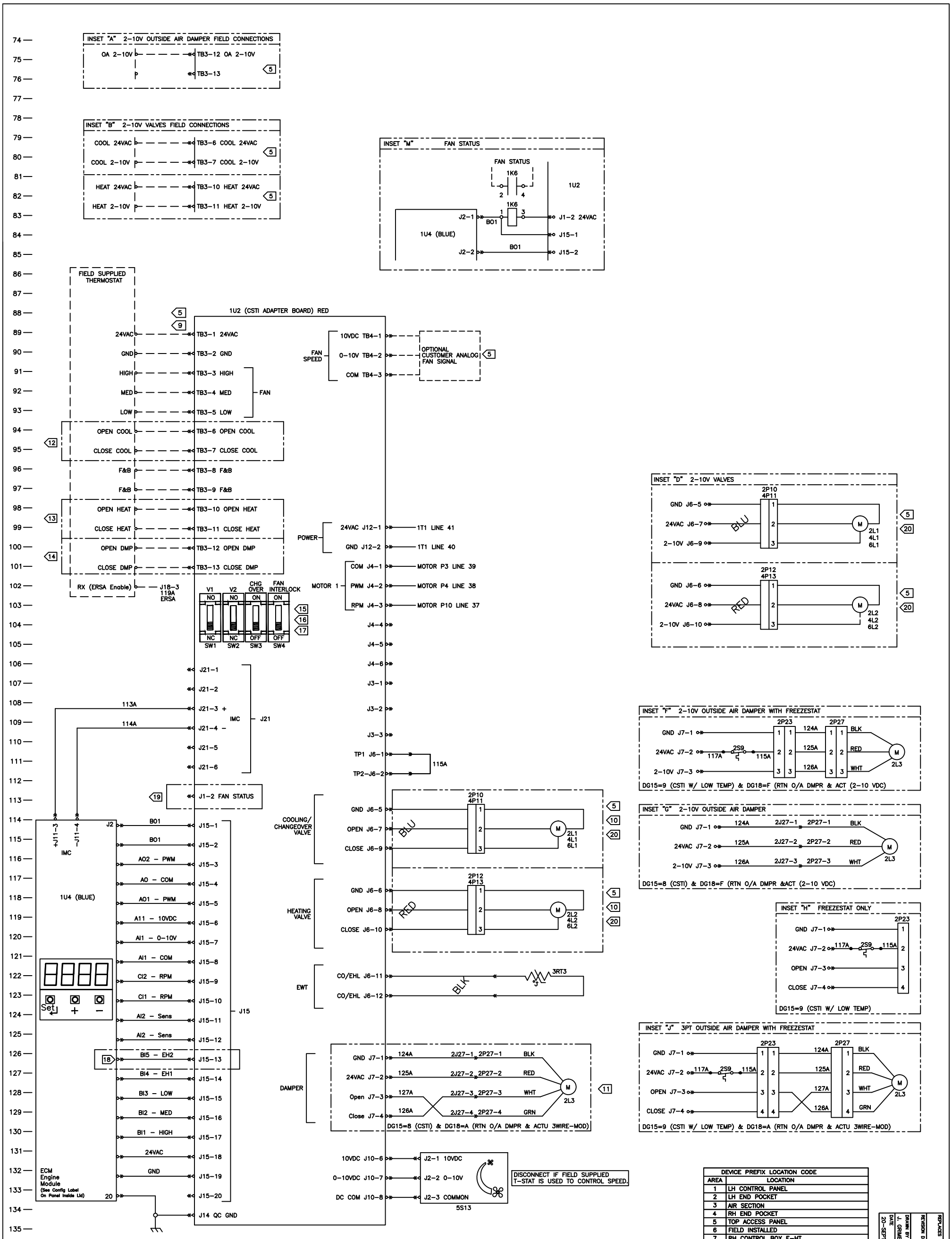

DEVICE PREFIX LOCATION CODE	
AREA	LOCATION
1	LH CONTROL PANEL
2	LH END POCKET
3	AIR SECTION
4	RH END POCKET
5	TOP ACCESS PANEL
6	FIELD INSTALLED
7	RH CONTROL BOX E-HT

NOTES:

1. UNLESS OTHERWISE NOTED, ALL SWITCHES ARE SHOWN AT 25° C (77° F), AT ATMOSPHERIC PRESSURE, AT 50% RELATIVE HUMIDITY, WITH ALL UTILITIES TURNED OFF, AND AFTER A NORMAL SHUTDOWN HAS OCCURRED.
2. DASHED LINES INDICATE RECOMMENDED FIELD WIRING BY OTHERS. DASHED LINE ENCLOSURES AND/OR DASHED DEVICE OUTLINES INDICATE COMPONENTS PROVIDED BY THE FIELD. PHANTOM LINED ENCLOSURES INDICATE ALTERNATE CIRCUITRY OR AVAILABLE SALES OPTIONS. SOLID LINES INDICATE WIRING BY TRANE CO.
4. ALL FIELD WIRING MUST BE IN ACCORDANCE WITH THE NATIONAL ELECTRIC CODE (NEC), STATE AND LOCAL REQUIREMENTS. ALL FIELD WIRING MUST HAVE AN INSULATION VOLTAGE RATING THAT EQUALS OR EXCEEDS UNIT RATED VOLTAGE

5 USE CLASS 2 WIRING.

9 24V OUTPUT IS RATED 15VA.

10 WIRING SHOWN IS FOR MODULATING VALVES. SEE INSET "D" FOR 2-10V VALVES.

11 WIRING SHOWN IS FOR 3 WIRE MODULATING DAMPER. SEE INSET "F" FOR 2-10V DAMPER WITH FREEZESTAT. SEE INSET "G" FOR 2-10V DAMPER WITHOUT FREEZESTAT. SEE INSET "H" FOR FREEZESTAT ONLY. SEE INSET "J" FOR 3 WIRE MODULATING DAMPER WITH FREEZESTAT.

12 FIELD WIRING SHOWN IS FOR MODULATING COOLING VALVES. SEE INSET "B" FOR 2-10V COOLING VALVE CONNECTIONS. FIELD SUPPLIED ACTUATOR WIRING UTILIZES THE SAME CONNECTION POINTS AS FACTORY ACTUATOR WIRING.

13 FIELD WIRING SHOWN IS FOR MODULATING HEATING VALVES. SEE INSET "B" FOR 2-10V HEATING VALVE CONNECTIONS. FIELD SUPPLIED ACTUATOR WIRING UTILIZES THE SAME CONNECTION POINTS AS FACTORY ACTUATOR WIRING.

14 FIELD WIRING SHOWN IS FOR MODULATING OUTSIDE AIR DAMPER. SEE INSET "A" FOR 2-10V OUTSIDE AIR DAMPER FIELD WIRING.

15 SW1 AND SW2 ARE ALWAYS IN THE N.C. POSITION.

16 SW3 IS SHOWN IN THE OFF POSITION. SW3 IS SET TO OFF POSITION WHEN DG12=E,H,X,K,R,D,G. SW3 IS SET TO ON POSITION WHEN DG12=A.

17 SW4 IS ALWAYS IN OFF POSITION.

18 WIRE BI5-EH2 NOT PRESENT ON 2-10V VALVE UNITS.

19 SEE INSET "M" FOR FAN STATUS WIRING. DG15 = N.

20 FIELD SUPPLIED ACTUATOR WIRING UTILIZES THE SAME CONNECTION POINTS AS FACTORY ACTUATOR WIRING.

LEGEND		
DEVICE DESIGNATION	DESCRIPTION	LINE NUMBER
1U2	CSTI ADAPTER BOARD	88,92
1U4	ENGINE BOARD	118,84
1K6	RELAY; FAN STATUS	82,83
2L1	COOLING COIL VALVE MOTOR	99,114
4L1	COOLING COIL VALVE MOTOR	99,114
6L1	COOLING COIL VALVE MOTOR	99,114
2L2	HEATING COIL VALVE MOTOR	104,118
4L2	HEATING COIL VALVE MOTOR	104,118
6L2	HEATING COIL VALVE MOTOR	104,118
2L3	OUTSIDE AIR DAMPER ACTUATOR	110,115,128,129
2S9	CSTI FREEZESTAT	110,120,127
3RT3	ENTERING WATER TEMP SENSOR	122
5S13	UNIT MOUNTED FAN SWITCH	134

REPLACES
REVISION DATE
DRAWN BY J. GRIMES
DATE 20-SEPT-2018
SIMILAR TO
TRANE
4619-3720
SCHEMATIC DIAGRAM
HORIZONTAL UNIT VENT
CSTI STANDARD COILS
REV B