Diagnostic Troubleshooting Repair

RTAC

CHHP Compressor Service and Trouble Shooting

Order Number: **RTAC-SVD02B-EN** Date: December 2004

Pueblo Built Units Only

Introduction

The purpose of this bulletin is to provide troubleshooting and repair procedures for CHHP compressors.

NOTICE: Warnings and Cautions appear at appropriate sections throughout this literature. Read these carefully.

⚠ **WARNING:** Indicates a potentially hazardous situation which, if not avoided, could result in death or serious injury.

⚠ **CAUTION:** Indicates a potentially hazardous situation which, if not avoided, may result in minor or moderate injury. It may also be used to alert against unsafe practices.

CAUTION: Indicates a situation that may result in equipment or property-damage only accidents.

Compressor Operation

The CHHP (GP2) compressors are helical lobed, twin screw type with 5 lobes on the male rotor and 6 lobes on the female rotor.

The compressor is made of cast iron, semi-hermetic construction, directly driven by a three-phase motor. All suction gas passes through the air gap or around the motor for cooling.

© 2004 American Standard Inc. All rights reserved.

Both rotors are supported on rolling element bearings and lubricated by polyolester oil. External, high-side oil separator and oil sump are required for bearing lubrication and injection oil. All compressors have a single oil connection point, internal oil filter and an internal oil check valve and pressure relief valve. Oil system isolation is accomplished by a Roto-Loc valve centrally mounted on the oil filter housing for orientation either right or left. An oil cooler may be required for certain higher head applications

.

Figure 1 GP2 Compressor

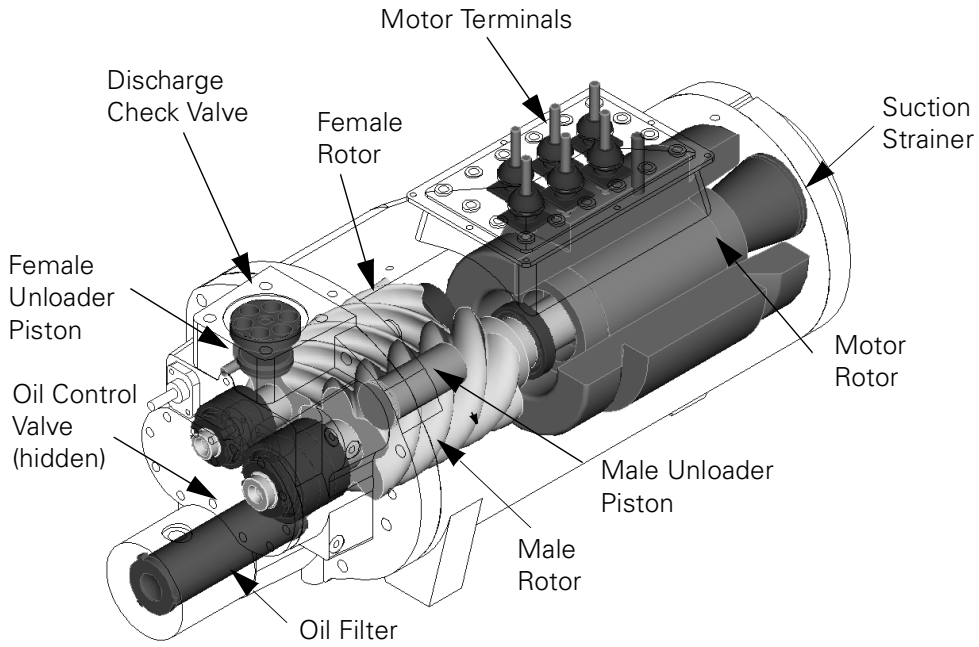

The compressors are designed for operation in one direction only (male rotor clockwise when viewed from the motor end). A high side check valve is provided to minimize reverse rotation on shutdown.

Unloading is accomplished using variable/port-unloading. A male slide piston is located above and ported to the male screw rotor. The slide piston position is oil operated and controlled by a pair of 2-way solenoid valves, one for loading and one for unloading. The step unloader is gas operated and controlled by a 3-way solenoid valve.

When operating at full load, the slide piston is always unloaded first to modulate load between 100% and 60%. The female step unloader is the last step in capacity control and provides a single step from 60% to 30% load. The compressor must always be started in the fully unloaded condition. After starting the compressor, the step unloader is always loaded first and then the variable slide piston. Damage or failure from high discharge temperatures can occur if the male loader is operating without the female step load energized.

Figure 2 Compressor Capacity

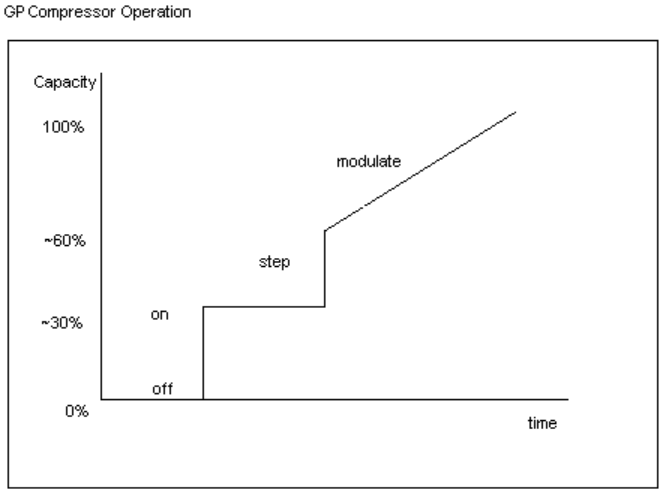

Troubleshooting

Important

Environmental Concerns!

Scientific research has shown that certain man-made chemicals can affect the earth's naturally occurring stratospheric ozone layer when released to the atmosphere. In particular, several of the identified chemicals that may affect the ozone layer are refrigerants that contain Chlorine, Fluorine and Carbon (CFCs) and those containing Hydrogen, Chlorine, Fluorine and Carbon (HCFCs). Not all refrigerants containing these compounds have the same potential impact to the environment. Trane advocates the responsible handling of all refrigerants—including industry replacements for CFCs such as HCFCs and HFCs.

Responsible Refrigerant Practices!

Trane believes that responsible refrigerant practices are important to the environment, our customers, and the air conditioning industry. All technicians who handle refrigerants must be certified. The Federal Clean Air Act (Section 608) sets forth the requirements for handling, reclaiming, recovering and recycling of certain refrigerants and the equipment that is used in these service procedures. In addition, some states or municipalities may have additional requirements that must also be adhered to for responsible management of refrigerants. Know the applicable laws and follow them.

⚠ WARNING

Contains Refrigerant!

System contains oil and refrigerant under high pressure. Recover refrigerant to relieve pressure before opening the system. See unit nameplate for refrigerant type. Do not use non-approved refrigerants, refrigerant substitutes, or refrigerant additives.

Failure to follow proper procedures or the use of non-approved refrigerants, refrigerant substitutes, or refrigerant additives could result in death or serious injury or equipment damage.

⚠ WARNING

Hazardous Voltage!

Disconnect all electric power, including remote disconnects before servicing. Follow proper lockout/tagout procedures to ensure the power can not be inadvertently energized. Failure to disconnect power before servicing could result in death or serious injury.

Male Unloader Piston

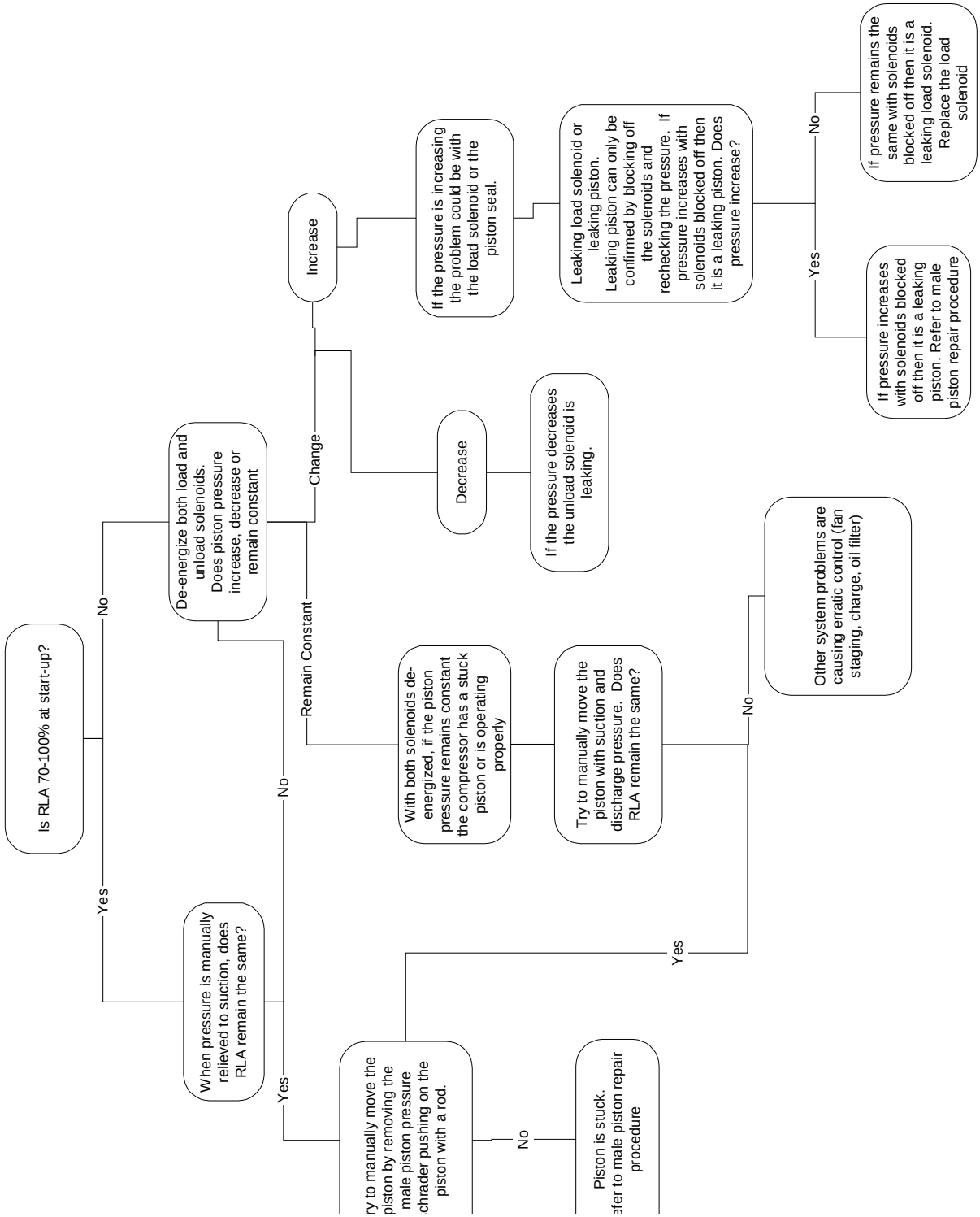

Female Unloader Piston

If the female Unloader is not working properly the compressor will not load up to 100% RLA. This checkout procedure assumes that the male unloader is working properly.

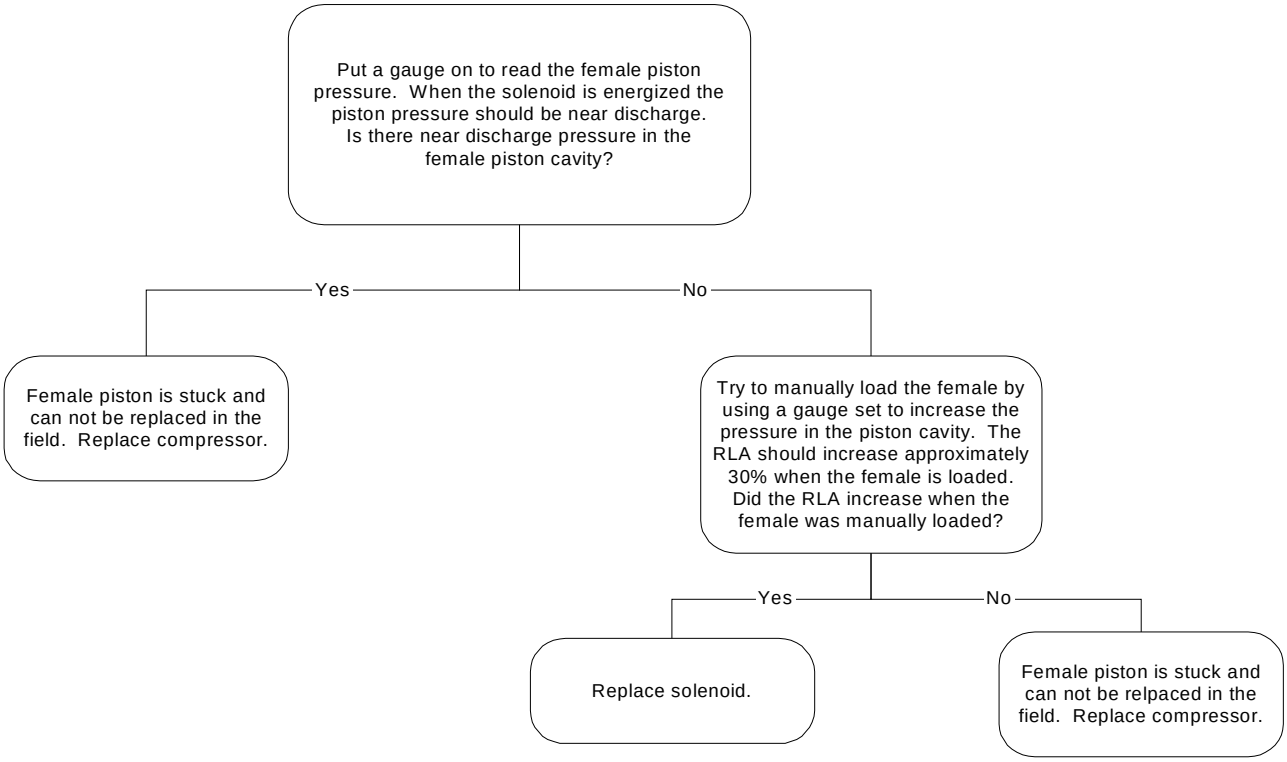

Oil control valve and Oil filter

If the oil control valve is not working properly it will act as a restriction in the oil line. A restriction (dirty filter or non-functioning oil control valve) will cause the compressor to be very loud and/or trip on Low Oil Flow.

Routine changing of the oil filter is not required. Figure 3 is an example plot of the pressure drop of clean filter on a N1 compressor. The formulas below describe the oil protection scheme.

P_C = Condenser Pressure

P_I = Intermediate Pressure

P_E = Evaporator Pressure

For the first 2.5 minutes of operation of the circuit while the Delta P is greater than 35 Psid the Acceptable Intermediate Oil Pressure Range is:

$$0.50 > \frac{(P_C - P_I)}{(P_C - P_E)}$$

After 2.5 minutes, the acceptable Intermediate Oil Pressure Range is:

$$0.25 > \frac{(P_C - P_I)}{(P_C - P_E)}$$

Figure 3 Oil System Pressures

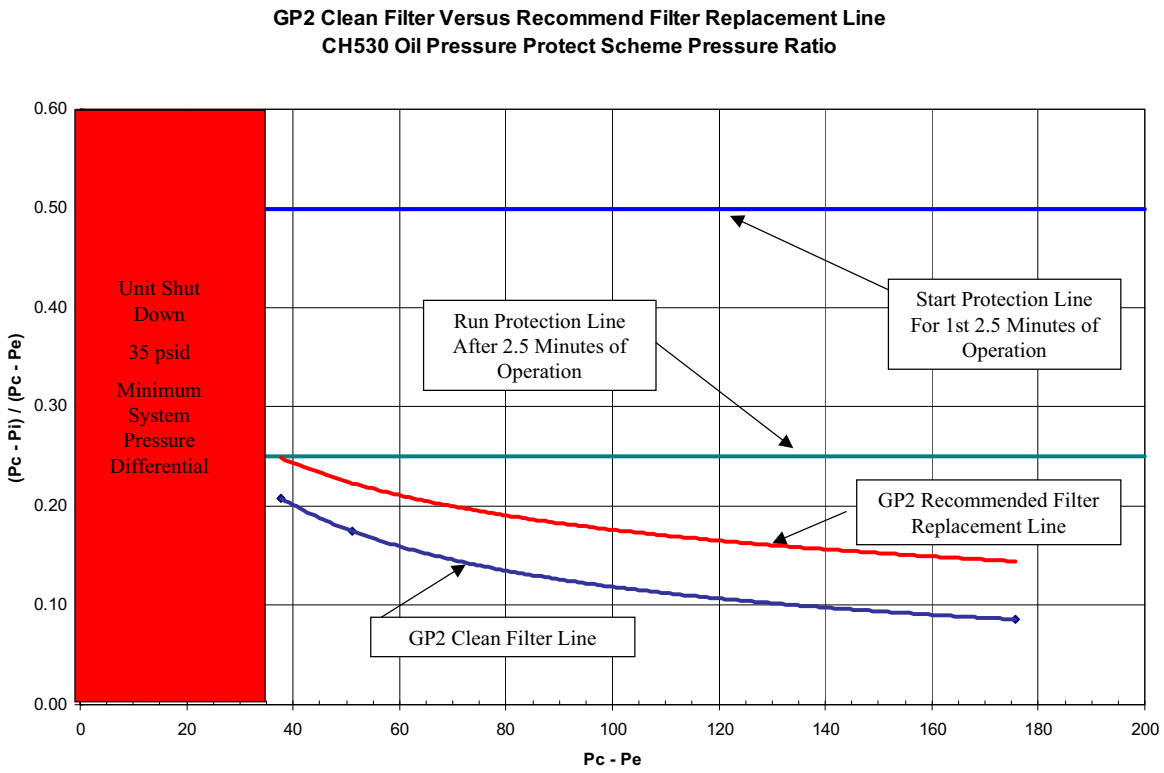

Oil presssure calculation worksheet. (download this file)

Figure 4 Component Locations

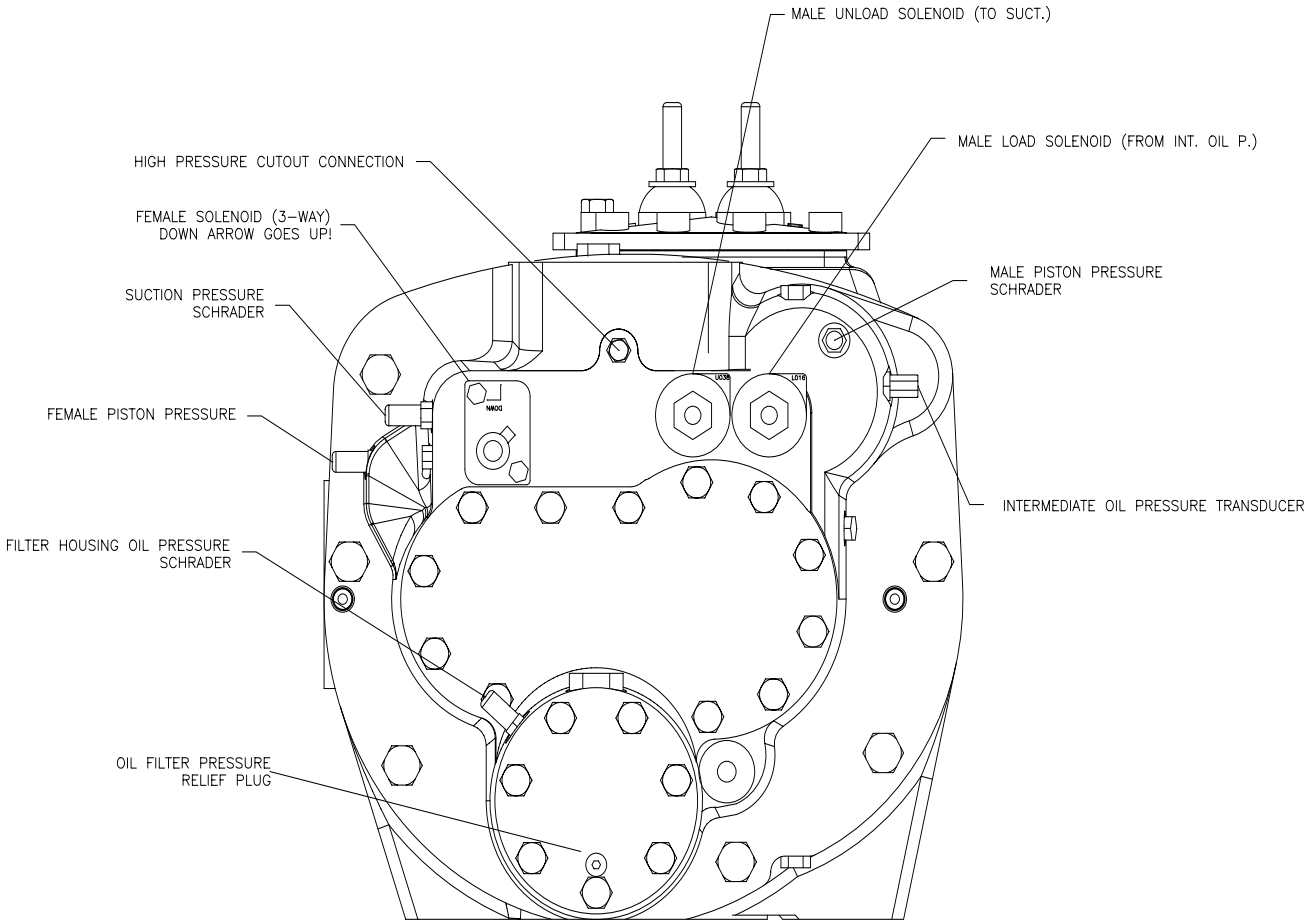

Repair Procedures

⚠ WARNING

Hazardous Voltage!

Disconnect all electric power, including remote disconnects before servicing. Follow proper lockout/tagout procedures to ensure the power can not be inadvertently energized. Failure to disconnect power before servicing could result in death or serious injury.

Male Unloader Piston

Tools needed: Impact Wrench, 4 pieces- 1 ft. long of M16 all thread and M24 socket

1. Do a service pumpdown and Isolate the low side (close discharge service valve and oil line valve) including the compressor.
2. Remove vapor.
   Reclaim Refrigerant (from oil) through male piston pressure schrader.
3. Remove solenoid coils, intermediate pressure transducer line & HPC Switch

4. Unbolt discharge service valve at the compressor and tie line back out of the way.
5. Remove Suction Line and Suction Screen.
6. Remove motor rotor bolt using impact wrench
7. Cover suction inlet on compressor with tape.
8. Remove bolts that secure bearing housing to rotor housing including the one on belly of compressor (**Note:** thread 3 guide rods into compressor before removing the last bolt)
9. Separate the compressor motor and bearing housings. This can be done by placing jacking bolts into dowel pin holes (this will force compressor to separate)
10. Slide bearing housing **no more than** 5 inches (12.7 cm) away from the rotor housing

Figure 5 Compressor motor and bearing housings

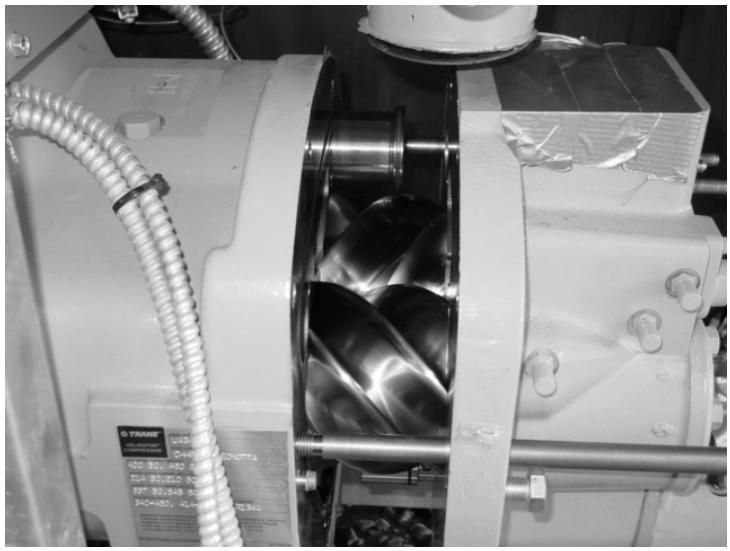

11. Remove the male unloader and inspect bore of both bearing and rotor housings for debris and scaring.
12. Remove and discard old o-ring.
13. Install new male unloader into rotor housing

14. Pull out the guide rods one by one to put the o-ring in place. Replace guide rods. Put a small amount of loctite 515 on the outside of the o-ring grove.

Figure 6 O-ring grove

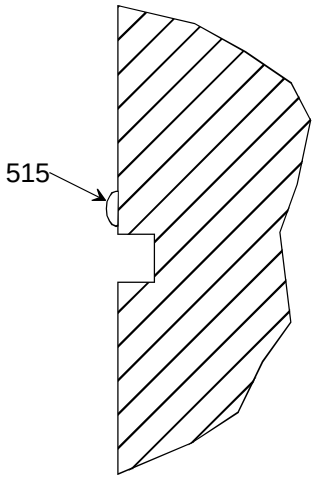

15. Slide bearing housing back toward rotor housing until the male rotor reaches the suctionbearing.
16. Thread 4th guide rod into male rotor.
17. While pushing bearing housing in, lift guide rod (slightly) until bearing housing is flush with rotor housing.
18. Re-install bolts and torque to 170 ft-lbs.
19. Add drop of Loctite 271 to first two threads of motor rotor bolt.
20. Use impact wrench to re-install motor rotor bolt.
21. Re-install suction screen.
22. Replace suction o-ring.
23. Re-install suction line and torque to 175 ft-lbs.
24. Replace discharge valve gasket.
25. Re-install discharge service valve/line and torque to 175 ft-lbs.
26. Replace teflon seal for fitting of oil valve entering compressor.
27. Re-install oil valve entering compressor.

Use the following table to review the parts involved in this repair.

Description	Part Number
Male unloader	VAL08037 - M1 VAL08138 - M2 VAL08184 - N1 VAL08185 - N2

Description	Part Number
O-ring for bearing to rotor housing - N Frame	RNG01699
O-ring for bearing to rotor housing -M Frame	RNG01698
Teflon seal for oil valve entering compressor	CPL00934
Discharge valve gasket	GKT02706
Suction O-ring	RNG01414
Suction O-ring	RNG01415
Oil Return line fitting and O-ring	ADP00909 RNG01697
Male solenoid gasket	GKT03466
Female solenoid gasket (need 3)	RNG01397

Oil control valve and Oil filter

Tools needed: 2" deep well socket, 3/16 hex head and M12 socket.

1. Lock Circuit out.
2. Isolate and reclaim the compressor.
3. Reclaim refrigerant from oil filter cavity through the oil pressure schrader on oil filter housing.
4. Assure that pressure is relieved from oil filter housing cavity by loosening the bolt over the brass washer (see Figure 4).
5. Remove the oil filter housing cover.
6. The filter should slide out freely.
7. Remove the valve using the 2 inch socket.
8. Exercise the new valve. It should move freely.
9. Replace the valve using the 2" socket.
10. Replace the oil filter.
11. Replace the oil housing cover and torque to 70 ft-lbs
12. Refill the oil filter cavity oil.
13. Evacuate filter housing through oil pressure schrader on oil filter housing.

14. Open all valves.

Figure 7 Oil Control Valve

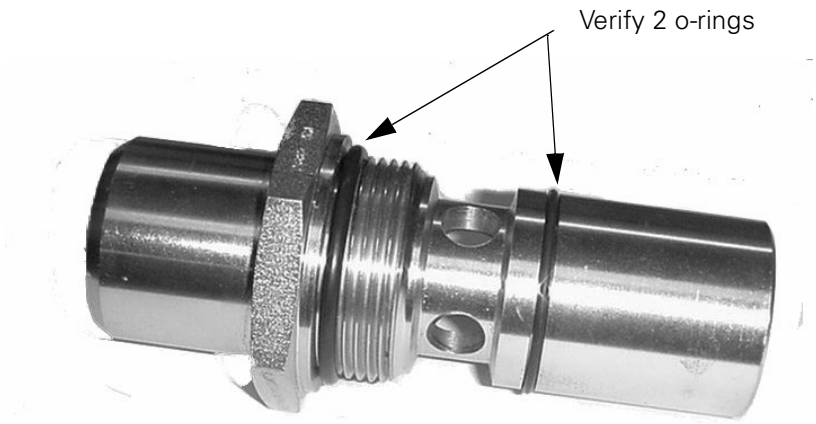

Description	Part Number
Oil Filter	FLR01650
Valve	VAL07307
Gasket	GKT03852
Schrader	VAL07306

Oil Charging Procedure

The GP2 is designed to have the entire oil charge delivered through the schraeder fitting on the side of the compressor oil filter cavity. The purpose of adding oil in this location is to provide the compressor with sufficient oil immediately upon start and to purge the filter cavity, oil shutoff valve and oil line to separator of any vapor that could prevent adequate oil flow at startup.

Like many machines, an excessive oil charge can cause operational problems. Special care should always be taken to avoid adding extra oil. The symptoms of an oil over charge are as follows:

EXV is open wide

Liquid Level is low

Flashing in the Sight Glass

Little or no Discharge Superheat

These symptoms may occur in one or both circuits. Oil overcharge should not be confused with an undercharge of refrigerant which may exhibit the first three symptoms but will be accompanied by high Discharge Superheat.

Units that exhibit the symptoms of an oil overcharge at high loads may still run fine at light loads. An oil overcharged unit may result in an evaporator limit warning or even a low liquid level or low evap temp (LRTC) diagnostic. An oil overcharged unit may exhibit increased approach temperatures and decreased overall unit efficiency.

Discharge Check Valve

Figure 8 Check Valve

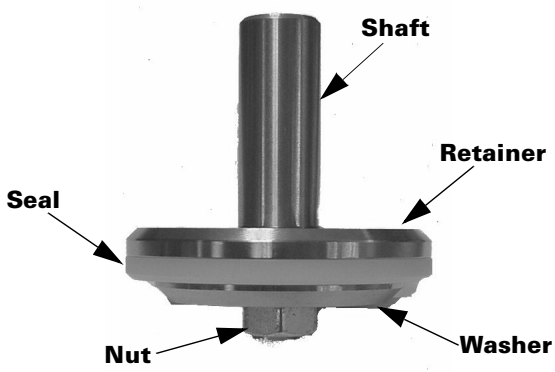

The figure above shows the correct check valve assembly. If you see the white seal when looking into the discharge port, the check valve is assembled incorrectly.

1. Lock Circuit out.
2. Isolate and reclaim the compressor.
3. Unbolt discharge service valve at the compressor and tie line back out of the way.
4. Remove check valve support.
5. Remove check valve.
6. The new check valve will come un-assembled.
7. Assemble it as shown in the Figure 8. Torque nut to 38 ft-lbs.
8. Re-install check valve.

   Be careful not to damage the seat of the check valve by dropping it into place.
9. Re-install check valve support.
10. Re-install discharge service valve and torque to 175 ft-lbs.

Description	Part Number
Check Valve Kit	KIT08032
Discharge Service Valve Gasket	GKT02706

Figure 9 Compressor

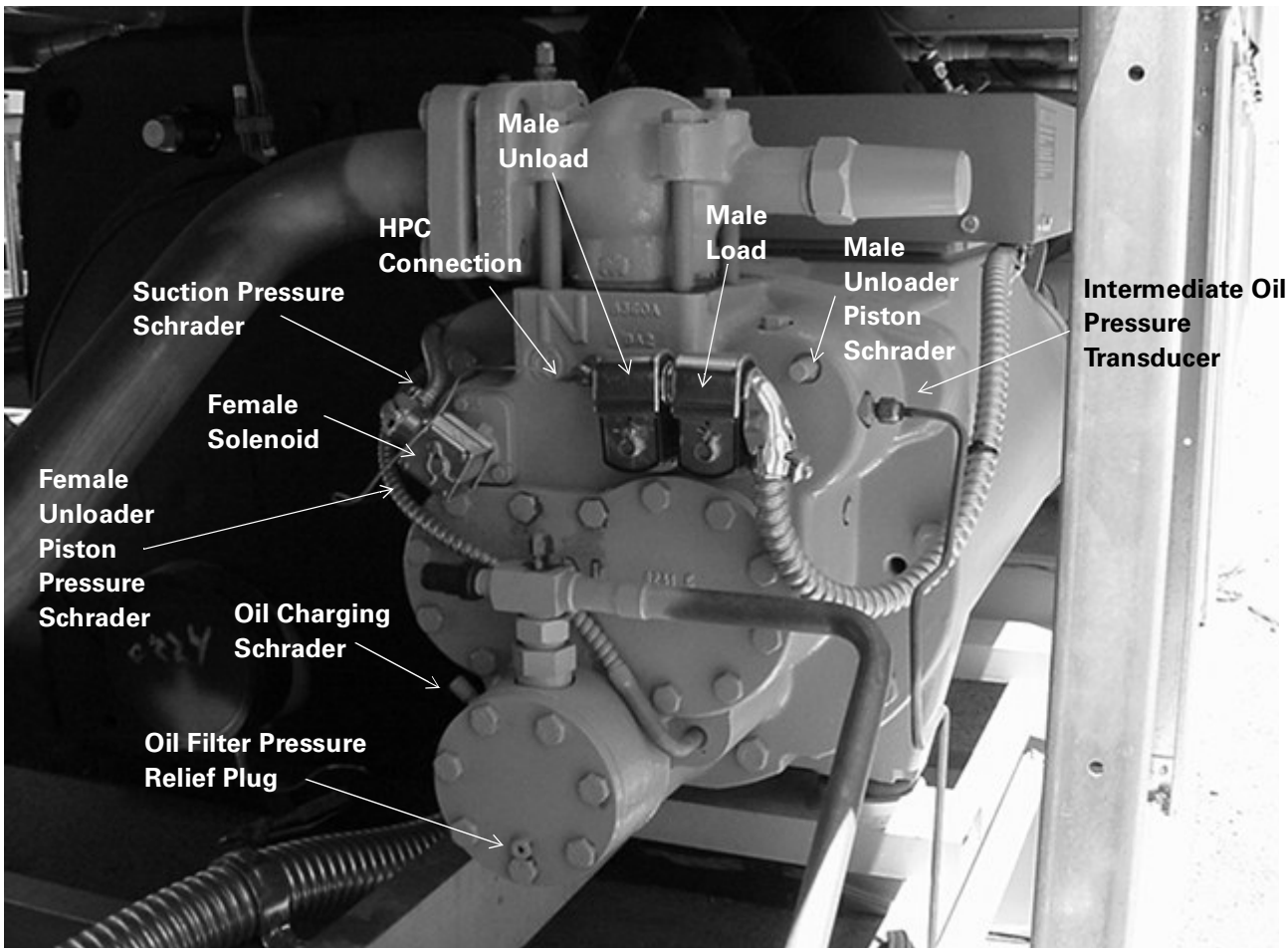

Questions

Contact the Product Technical Service department in Pueblo, Colorado with questions regarding this Service Bulletin. They can be reached at techservicepueblo@trane.com or 888-244-5537.

Trane
A business of American Standard Companies
www.trane.com

For more information contact your local district office or e-mail us at comfort@trane.com

Literature Order Number	RTAC-SVD02B-EN
File Number	SL-RF-RLC-RTAC-SVD02B-EN-0404
Supersedes	New
Stocking Location	Electronic Only

Trane has a policy of continuous product data and product improvement and reserves the right to change design and specifications without notice. Only qualified technicians should perform the installation and servicing of equipment referred to in this bulletin.