Programming Guide

Tracer™ LonTalk®Communications Interface for IntelliPak™ (LCI-I) Systems I and II

For Rooftop Handlers (RT) Systems and Commercial Self-Contained (CSC)

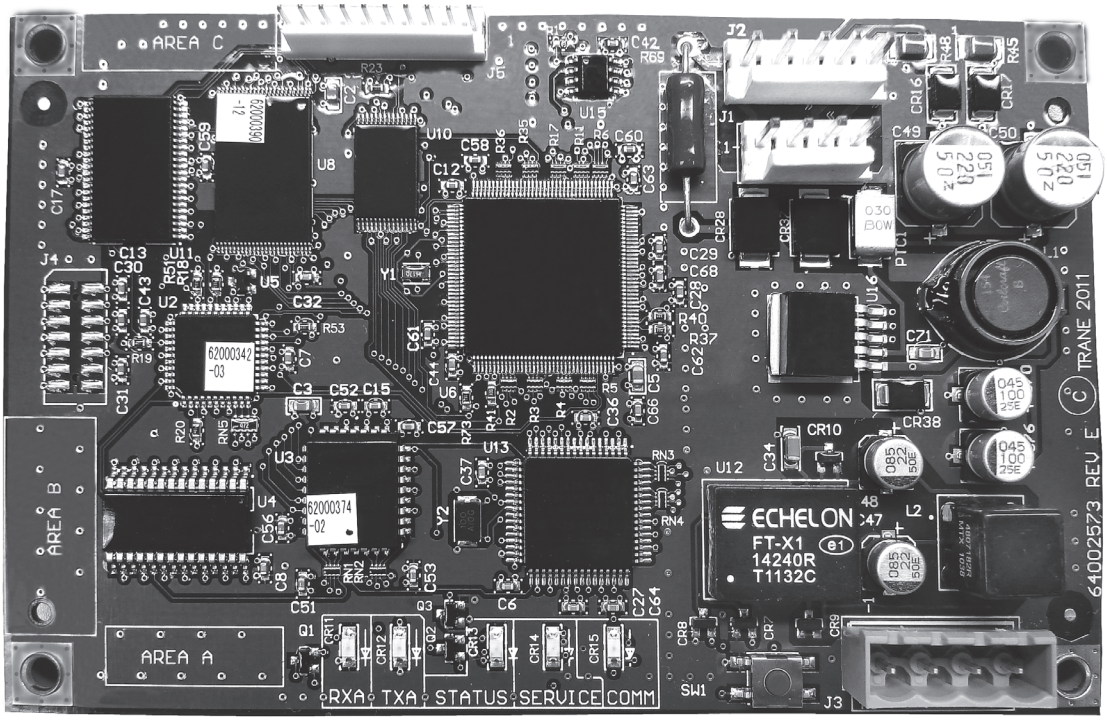

⚠SAFETY WARNING

Only qualified personnel should install and service the equipment. The installation, starting up, and servicing of heating, ventilating, and air-conditioning equipment can be hazardous and requires specific knowledge and training. Improperly installed, adjusted or altered equipment by an unqualified person could result in death or serious injury. When working on the equipment, observe all precautions in the literature and on the tags, stickers, and labels that are attached to the equipment.

May 2020 **BAS-SVP02D-EN**

Introduction

Warnings, Cautions, and Notices

Safety advisories appear throughout this manual as required. Your personal safety and the proper operation of this machine depend upon the strict observance of these precautions.

The three types of advisories are defined as follows:

⚠WARNING	Indicates a potentially hazardous situation which, if not avoided, could result in death or serious injury.
⚠CAUTION	Indicates a potentially hazardous situation which, if not avoided, could result in minor or moderate injury. It could also be used to alert against unsafe practices.
NOTICE	Indicates a situation that could result in equipment or property-damage only accidents.

Important Environmental Concerns

Scientific research has shown that certain man-made chemicals can affect the earth's naturally occurring stratospheric ozone layer when released to the atmosphere. In particular, several of the identified chemicals that may affect the ozone layer are refrigerants that contain Chlorine, Fluorine and Carbon (CFCs) and those containing Hydrogen, Chlorine, Fluorine and Carbon (HCFCs). Not all refrigerants containing these compounds have the same potential impact to the environment. Trane advocates the responsible handling of all refrigerants-including industry replacements for CFCs and HCFCs such as saturated or unsaturated HFCs and HCFCs.

Important Responsible Refrigerant Practices

Trane believes that responsible refrigerant practices are important to the environment, our customers, and the air conditioning industry. All technicians who handle refrigerants must be certified according to local rules. For the USA, the Federal Clean Air Act (Section 608) sets forth the requirements for handling, reclaiming, recovering and recycling of certain refrigerants and the equipment that is used in these service procedures. In addition, some states or municipalities may have additional requirements that must also be adhered to for responsible management of refrigerants. Know the applicable laws and follow them.

⚠WARNING

Proper Field Wiring and Grounding Required!

Failure to follow code could result in death or serious injury. All field wiring MUST be performed by qualified personnel. Improperly installed and grounded field wiring poses FIRE and ELECTROCUTION hazards. To avoid these hazards, you MUST follow requirements for field wiring installation and grounding as described in NEC and your local/state electrical codes. Failure to follow code could result in death or serious injury.

⚠WARNING

Personal Protective Equipment (PPE) Required!

Failure to wear proper PPE for the job being undertaken could result in death or serious injury. Technicians, in order to protect themselves from potential electrical, mechanical, and chemical hazards, MUST follow precautions in this manual and on the tags, stickers, and labels, as well as the instructions below:

- **Before installing/servicing this unit, technicians MUST put on all PPE required for the work being undertaken (Examples; cut resistant gloves/sleeves, butyl gloves, safety glasses, hard hat/bump cap, fall protection, electrical PPE and arc flash clothing). ALWAYS refer to appropriate Safety Data Sheets (SDS) and OSHA guidelines for proper PPE.**
- **When working with or around hazardous chemicals, ALWAYS refer to the appropriate SDS and OSHA/GHS (Global Harmonized System of Classification and Labeling of Chemicals) guidelines for information on allowable personal exposure levels, proper respiratory protection and handling instructions.**
- **If there is a risk of energized electrical contact, arc, or flash, technicians MUST put on all PPE in accordance with OSHA, NFPA 70E, or other country-specific requirements for arc flash protection, PRIOR to servicing the unit. NEVER PERFORM ANY SWITCHING, DISCONNECTING, OR VOLTAGE TESTING WITHOUT PROPER ELECTRICAL PPE AND ARC FLASH CLOTHING. ENSURE ELECTRICAL METERS AND EQUIPMENT ARE PROPERLY RATED FOR INTENDED VOLTAGE.**

⚠WARNING

Follow EHS Policies!

Failure to follow instructions below could result in death or serious injury.

- **All Trane personnel must follow the company's Environmental, Health and Safety (EHS) policies when performing work such as hot work, electrical, fall protection, lockout/tagout, refrigerant handling, etc. Where local regulations are more stringent than these policies, those regulations supersede these policies.**
- **Non-Trane personnel should always follow local regulations.**

Copyright

This document and the information in it are the property of Trane, and may not be used or reproduced in whole or in part without written permission. Trane reserves the right to revise this publication at any time, and to make changes to its content without obligation to notify any person of such revision or change.

Trademarks

All trademarks referenced in this document are the trademarks of their respective owners.

Revision History

- BAS-SVP02C-EN (30 May 2012)
- Update to PCB board layout.

Table of Contents

Overview 10

Specifications and Dimensions 11

LonMark Product Details 12

Supporting Units/Software and Configurations 13

- Supporting Units/Software 13
- Configuration 14

Communication Link and Setup 15

- LonTalk Communication Link Wiring Requirements 15
- Setup 15
  - Human Interface Setup 15
  - Device Addressing 15
  - Network Variable Summary for Space Comfort Control (SCC) and Discharge Air Control (DAC) 15

Network Variable Input Definitions 23

- Application Mode Input: nviApplicMode 23
- Auxiliary Heat Enable Input: nviAuxHeatEnable 24
- Building Static Pressure Setpoint Input: nviBldgStaticSP 24
- Building Static Pressure Input: nviBldgStatPress 25
- Compressor Enable Input: nviComprEnable 25
- Condenser Waterflow Input: nviCWFlow 26
- Dehumidification Enable Input: nviDehumEnable 26
- Discharge Air Cooling Setpoint Input: nviDAClSP 26
- Discharge Air DewPoint Setpoint Input: nviDADewPointSP 27
- Discharge Air Heating Setpoint Input: nviDAHtSP 27
- Discharge Air Reheat Setpoint Input: nviDAReheatSP 27
- Duct Static Pressure Setpoint Input: nviDuctStaticSP 27
- Duct Static Pressure Input: nviDuctStatPress 28
- Economizer Enable Input: nviEconEnable 28
- Emergency Override Input: nviEmergOverride 28
- Heat/Cool Mode Input: nviHeatCool 28
- Humidification Enable Input: nviHumEnable 29
- Master Slave Input1: nviMasterSlave1 30
- Master Slave Input2: nviMasterSlave2 30
- Minimum Outdoor Air Flow Setpoint Input: nviMinOAFlowSP 30
- Outdoor Air Minimum Position Input: nviOAMinPos 30
- Occupancy Override Input: nviOccManCmd 31

Occupancy Scheduler Input: nviOccSchedule 31
Occupancy Sensor Input: nviOccSensor 32
Outdoor Air Humidity Input: nviOutdoorRH 33
Outdoor Air Temperature Input: nviOutdoorTemp 33
Primary Cool Enable Input: nviPriCoolEnable 33
Primary Heat Enable Input: nviPriHeatEnable 34
Status Request Input: nviRequest 35
Temperature Setpoint Input (Absolute): nviSetpoint 36
Setpoint Offset Input: nviSetptOffset 36
Setpoint Shift Input: nviSetptShift 37
Space CO2 Sensor Input: nviSpaceCO2 (nviSpaceIAQ) 37
Space Dehumidification Setpoint Input: nviSpaceDehumSP 37
Space Humidification Setpoint Input: nviSpaceHumSP 38
Space Humidity Input: nviSpaceRH 38
Space Temperature Input: nviSpaceTemp 38

Network Variable Output Definitions 39
Alarm Message Text Output: nvoAlarmMessage 39
Application Mode Output: nvoApplicMode 46
Building Static Pressure Output: nvoBldgStatPress 46
Cluster Configuration: nvoClusterConfig 47
Condenser Capacity Output: nvoCondCap 47
Condenser Waterflow Output: nvoCWFlow 47
Condenser Water Pump Output: nvoCWPump 48
Condenser Water Temperature Output: nvoCWTemp 48
Discharge Air Dewpoint Temperature Output, nvoDADewPoint 48
Discharge Air Reheat Setpoint Output, nvoDAReheatSP 48
Dehumidification Status Output, nvoDehumidifier 49
Discharge Air Temperature Output, nvoDischAirTemp 49
Duct Static Pressure Output, nvoDuctStatPress 49
Economizer Enabled Output, nvoEconEnabled 50
Effective Discharge Dewpoint Setpoint Output, nvoEffDADewPtSP 50
Effective Discharge Air Temperature Setpoint Output, nvoEffDATempSP 50
Effective Duct Static Pressure Setpoint Output, nvoEffDuctStatSP 51
Effective Occupancy Output, nvoEffectOccup 51
Effective Setpoint Output, nvoEffectSetpt 52
Effective Space Dehumidification Setpoint Output, nvoEffSpaceDHSP . . . 52
Effective Space Humidification Setpoint Output, nvoEffSpaceHumSP . . . 52

Entering Water Temperature, nvoEnterWaterTmp 52
Energy Recovery Exhaust Air Bypass Damper Output, nvoEREABPDamper 53
Energy Recovery Frost Avoidance Status Output, nvoERFrostAvoid 53
Energy Recovery Leaving Exhaust Temperature, nvoERLvgExhTemp . . . 53
Energy Recovery Outside Air Bypass Damper Output, nvoEROABPDamper 54
Energy Recovery Status Output, nvoERStatus 54
Exhaust Damper Control Output, nvoExhDamper 54
Exhaust Fan On/Off Control Output, nvoExhFanOnOff 55
Exhaust Fan Status Output, nvoExhFanStatus 56
Fan Speed Output, nvoFanSpeed 56
Effective Heat/Cool Output, nvoHeatCool 57
Primary Heat Output, nvoHeatPrimary 57
Secondary Heat Output, nvoHeatSecondary 58
Humidification Status Output, nvoHumidifier 58
Local Condenser Water Temperature Output, nvoLocalCWTemp 58
Local Duct Static Pressure Output, nvoLocalDSPress 59
Local Outdoor Air Humidity Output, nvoLocalOARH 59
Local Outdoor Air Temperature Output, nvoLocalOATemp 59
Local Space Temperature Output, nvoLocalSpaceTmp 59
Master Slave Output 1, nvoMasterSlave1 60
Master Slave Output 2, nvoMasterSlave2 60
Mixed Air Temperature Output, nvoMATemp 61
Mixed Air Temperature Output, nvoMixedAirTemp 61
Occupancy Scheduler Output, nvoOccSchedule 61
Outdoor Air Damper Output, nvoOADamper 62
Outdoor Air Dewpoint Output, nvoOADewpoint 62
Outdoor Air Enthalpy Output, nvoOAEnthalpy 62
Outdoor Airflow Output, nvoOAFlow 62
Outdoor Air Humidity Output, nvoOutdoorRH 63
Outdoor Air Temperature Output, nvoOutdoorTemp 63
Return Air Temperature Output, nvoRATemp 63
Primary Cool Output, nvoCoolPrimary 63
Return Fan On/Off Control Output, nvoRetFanOnOff 64
Return Fan Pressure Output, nvoRetFanPress 64
Return Fan Status Output, nvoRetFanStatus 64
Local Setpoint Output, nvoSetpoint 65

Space CO2 Sensor Output, nvoSpaceCO2 65
Space Enthalpy Output, nvoSpaceEnthalpy 65
Space Humidity Output, nvoSpaceRH 66
Effective Space Temperature Output, nvoSpaceTemp 66
Status Request Output, nvoStatus 67
Supply Fan On/Off Control Output, nvoSupFanOnOff 69
Supply Fan Status Output, nvoSupFanStatus 69
Terminal Load Output, nvoTerminalLoad 70
Unit Status Output, nvoUnitStatus 70

Configuration 72

Configuration Property Definitions 75
Building Static Pressure Setpoint, nciBldgStaticSP 75
Local Bypass Time, nciBypassTime 75
Cooling Lockout Temperature Setpoint, nciCoolLockout 75
Cooling Reset Enable, nciCoolResetEn 75
Discharge Air Cooling Setpoint, nciDAClSP 76
Discharge Air Dewpoint Setpoint, nciDADewPointSP 76
Discharge Air Heating Setpoint, nciDAHtSP 76
Discharge Air Reheat Setpoint, nciDAReheatSP 76
Daytime Warm Up Initiate Setpoint, nciDaytime 77
Daytime Warm Up Termination Setpoint, nciDaytimeTerm 77
Device Build Version Number, nciDevBuildNum 77
Device Major Version Number, nciDevMajVer 77
Device Minor Version Number, nciDevMinVer 78
Duct Static Pressure Limit, nciDuctStatLim 78
Duct Static Pressure Setpoint, nciDuctStatSP 78
Energy Recovery Frost Avoidance Setpoint, nciERFrostAvoidSP 78
Exhaust Enable Position, nciExhaustConfig 79
Exhaust Enable Position, nciExhStartPos 79
Fan Operation, nciFanOperation 79
Heating Reset Enable, nciHeatResetEn 80
HVAC Unit Type Identifier, nciHvacType 80
Location Label, nciLocation 81
Minimum Outdoor Airflow Setpoint, nciMinOAFlowSP 81
Minimum Send Time, nciMinOutTm 81
Outdoor Air Enthalpy Setpoint, nciOAEnthSP 81
Outdoor Airflow Calibration, nciOAFlowCalib 82

Outdoor Air Damper Minimum Position, nciOAMinPos 82
Outdoor Air Temperature Setpoint, nciOATSP 82
Receive Heartbeat, nciRcvHrtBt 83
Return Fan Pressure Setpoint, nciRetFanPressSP 83
Occupancy Temperature Setpoints, nciSetpoints 83
Send Heartbeat, nciSndHrtBt 84
Space CO2 Limit, nciSpaceCO2Lim 84
Space Dehumidification Setpoint, nciSpaceDehumSP 84
Space Humidification Setpoint, nciSpaceHumSP 85
Space Humidity Setpoint, nciSpaceRHSetpt 85

Operation Modes and General Information 86
Operation Modes 86
Temperature Control Modes 86
Occupancy Modes 86
Timed Override Control Mode 90
Emergency Override Mode 90
Setpoint Operation Mode 90
Input Duct Static Pressure 91
Morning or Daytime Warm-Up 91
Discharge Air Temperature Control 91
Mixed Air and Outdoor Air Temperature Inputs 91
General Information 91
Location Identifier 91
Power-up Sequence 91
Peer-to-peer Communication 92

Troubleshooting 93
LED Activity 93
Red Service LED 93
Green Status LED 93
Yellow Comm LED 93
Yellow IPC RXA (Receives)/IPC TXA (Transmits) LED 94
Service Test and Input Requirements 94
Service Test 94
Required Inputs for Unit Operation 94
Diagnostics 94
General Notes 94
Translating Multiple Diagnostics 95
Resetting Diagnostics 95

Appendix 96
General Notes for Table 123, p. 102. 101

Glossary 114

Overview

The LonTalk® Communications Interface for IntelliPak™ (LCI-I) unitary systems provides a communication interface between a LonTalk network and a unit control system. The LCI-I uses an FTT-10A free-topology transceiver, which allows star, bus, and loop wiring architectures.

The interface can operate in any of the following ways:

- In stand-alone mode
- In peer-to-peer mode with one or more units
- On a Tracer Summit™ or third-party building automation system (BAS)

In addition, it is available as a factory-installed option or a field-installed kit. The features and functions described in this manual apply to either option.

Note: *Some unit features or functions described may not be available on all products or are defined by the manufacturer according to the LonMark® specification. In addition, they are not available to a third-party building automation system or service tool. (Refer to Table 1, p. 12) Certain network variables may require additional optional modules. Refer to the section, "Network Variable Summary– SCC," p. 16 and other appropriate product literature for more information.*

This programming guide provides the following information:

- Specifications and controller board
- LonMark product details
- Supporting units/software and configuration
- Communication link and setup
- Network variable input/output definitions
- Configuration property definitions
- Configuration and configuration definitions
- Operation modes and general information
- Troubleshooting
- Appendix
- Glossary

Important: *The LCI-I is not polarity sensitive. This interface should be installed by a qualified technician who is properly trained and experienced with LonTalk networks.*

Specifications and Dimensions

Storage	
Temperature:	-40°F to 185°F (-40°C to 85°C)
Relative Humidity:	Between 5% to 95% *(non-condensing)*
Operating	
Temperature:	-40°F to 185°F (-40°C to 85°C)
Relative Humidity:	Between 5% to 95% *(non-condensing)*
Board Dimensions:	5.5 in. x 3.5 in x 2.0 in (139.7 mm x 88.9 mm x 50.8 mm) 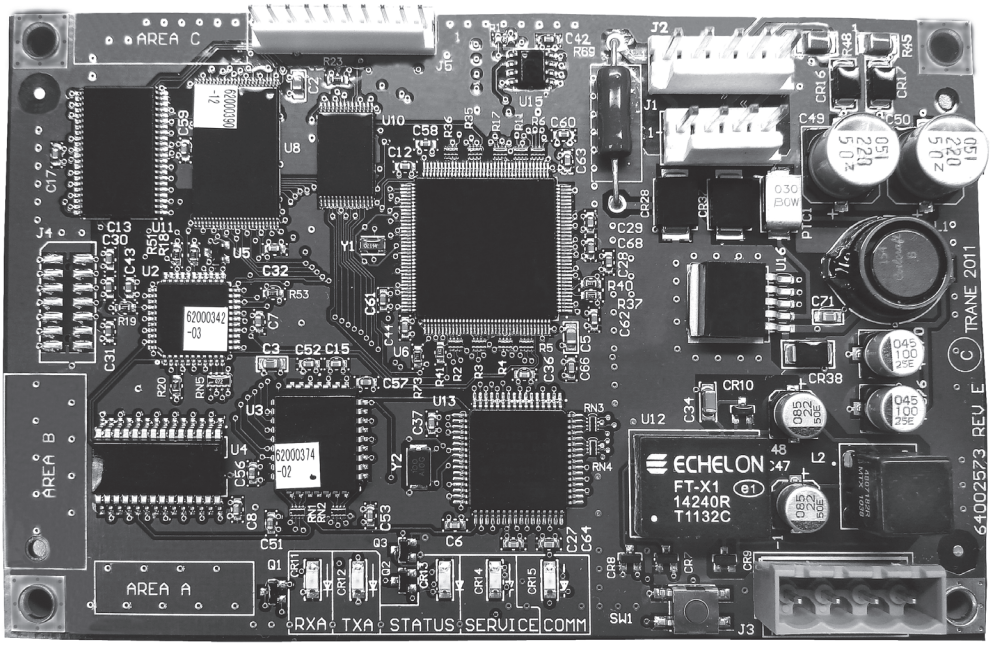
Power:	18–32 Vac (24 Vac nominal), maximum 3.3 VA, 50 or 60 Hz
Agency Compliance	
• U.L. unlisted component • U.L. 873, Temperature Indicating and Regulating Equipment • C.U.L. C22.2, No. 24-93, Temperature Indicating and Regulating Equipment	
LonMark Certification	
LonMark Application Layer Interoperability Guidelines, Version 3.2	

LonMark Product Details

Table 1. LonMark product details

Manufacturer:	Trane
Product Data Sheet:	• RT-PRG001-EN *(Rooftop)* • PKG-PRM001-EN *(Commercial Self-contained)*
Device Class:	Discharge Air Controller
Communication Channel:	TP/FT-10 *(ANSI/EIA-709.3)*
Usage:	Commercial
LonMark Version:	Version 3.4
Supported LonMark Objects:	• 0000; Node Object • 8500; Space Comfort Controller • 8610; Discharge Air Controller • 8 0002A 560a 03 04 05 • 3.4 @0, 8500, 8610 Tracer LCI-I • 80002A560A030405.XIF **Note:** Network Variables that are applicable to both supported profiles *(SCC and DAC)* may be listed twice in the XIF, but only one will be active, based on unit configuration. To determine which variable is active for a particular profile, refer to the variable self-doc string *(third line for each variable in the XIF)*. For example: VAR nviOccSchedule **113** 0 0 0 *(113 represents the network variable index for this device)* 0 1 63 0 2 1 0 1 0 0 0 0 0 "@**2**|**1**;nviOccSchedule *(2 represents the DAC object and 1 represents the DAC profile index 1)* VAR nviOccSchedule **114** 0 0 0 *(114 represents the network variable index for this device)* 0 1 63 0 2 1 0 1 0 0 0 0 0 "@**1**|**5**;nviOccSchedule *(1 represents the SCC object and 5 represents the SCC profile index 5)*
Note: For more details on information contained in this table, refer to www.lonmark.org	

Supporting Units/Software and Configurations

Supporting Units/Software

Figure 1, illustrates the supporting units and IntelliPak software versions for the LCI-I.

Figure 1. Supporting units/software

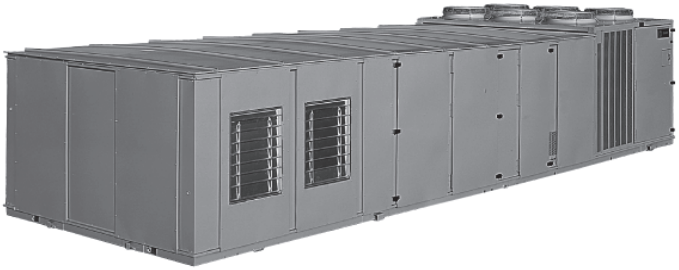

Rooftop (RT) systems and rooftop handlers

Models: S*HF, G, J/W*HG, and C

Commercial Self-Contained units (CSC)

Models: SCRF, SCRG, SCWF, SCWG, SIRF, SIRG, SIWF, and SIWG

Configuration

Table 2 lists supporting configurations and features for the LCI-I:

Table 2. Supporting configurations and features

Configurations		
	Constant-volume Space Temperature Control	**Variable-air-volume Control**
Product	**RT, CSC (Airflow)**	**RT, CSC (LonMark Profile)**
Rooftop	Constant-volume	Space Comfort Controller (SCC)
Rooftop	Variable-air-volume	Discharge Air Controller (DAC)
Self-Contained	Constant-volume	Space Comfort Controller (SCC)
Self-Contained	Variable-air-volume	Discharge Air Controller (DAC)
Features		
	Constant-volume Space Temperature Control	**Variable-air-volume Control[a]**
Product	**RT, CSC**	**RT, CSC**
Fan control	On/Off	Variable
Duct static pressure control	X[b]	X
DX Cooling	X	X
Hydronic cooling	X	X
Electric heat 1	X	X
Hydronic heat	X	X
Gas heat 1	X	X
Ventilation control	X	X
Economizer damper	X	X
Warm-up functions	X	X
Exhaust fan (ON/OFF)	X	X
Dehumidification	X	X

(a) Staged heat is not available during variable-air-volume control.
(b) Supported feature or control mode available in product.

Communication Link and Setup

The Tracer LCI-I controller communicates using the LonTalk protocol. Typically, a communication link is applied between unit controllers and a BAS. However, a communication link can be made by means of the Rover™ service tool or by peer-to-peer communication across controllers when a building automation system is not present.

The LonTalk communication protocol allows peer-to-peer communications between controllers. A communicated variable input *(such as a setpoint, space temperature, or outdoor air temperature)* has priority over a locally wired input to the controller. For example, if the LCI-I controller has a wired outdoor air temperature sensor, and Tracer Summit or another LonTalk controller sends it a communicated outdoor air temperature, the communicated value is used by the LCI-I controller. If a communicated input value is lost, the LCI-I controller reverts to using the locally wired sensor input.

Note: *Observe polarity for LonTalk communication links.*

The controller provides four terminals for the LonTalk communication link connections, as follows:

- Two terminals for communication to the board
- Two terminals for communication from the board to the next unit *(daisy chain)*

LonTalk Communication Link Wiring Requirements

The LonTalk communication link is used for connection to a LonTalk building network. The communication link wiring is dependent on the network architecture.

Note: *For proper wiring recommendations, refer to the LonWorks FTT-10A Free Topology Transceiver User's Guide at* ***www.echelon.com****. For Trane BAS installations, refer to the Comm5 Wiring Installation (BAS-SVN01) for wiring recommendations.*

Setup

Human Interface Setup

The unit must be changed from **LOCAL** to **BAS/NETWORK** *(remote)* control in the human interface **Setup** menu. To change to **BAS/NETWORK**:

1. Press the **Setup** menu button on the human interface and then press **Next**.
2. When the next screen displays, press the **+** button until the unit control is set to **BAS/NETWORK**.
3. Press **Enter**.

Device Addressing

LonTalk devices are given a unique Neuron ID address *(such as 00-01-64-1C-2B-00)* by the manufacturer. Each LCI-I controller can be identified by its unique Neuron ID and this ID is located on a label of each controller. The Neuron ID is also displayed when communication is established using Tracer Summit or Rover service tool.

Network Variable Summary for Space Comfort Control (SCC) and Discharge Air Control (DAC)

Table 3, p. 16 throughTable 16, p. 22 provide information about nodes, input/output variables, and configuration properties. For more details, refer to www.lonmark.org.

Network Variable Summary– SCC

Table 3. Node information

Information	NV#	NV Profile Index	SCPT/ UCPT	Name	Recv HrtBt	SNVT Type	Description	Product	
								RT	CSC
Node Network Variable Inputs	122	1		nviRequest	No	SNVT_obj_request	Status Request Input	X	X
Node Network Variable Outputs	244	2		nvoStatus	No	SNVT_obj_status	Status Request Output	X	X
Node Configuration Properties	21	3	165	nciDevMajVer	165	SCPTdevMajVer	Device Major Version Number	X	X
	22	4	166	nciDevMinVer	166	SCPTdevMinVer	Device Minor Version Number	X	X
Node Extension Network Variable Outputs	137			nvoAlarmMessage	No	SNVT_str_asc	Diagnostic Message	X	X
	141			nvoClusterConfig	No	U16	master_slave_t	X	X
Node Extension Configuration Properties	19	3	3	nciDevBuildNum	No	U16	Software Build Number	X	X

Table 4. SCC network variable inputs

NV#	NV Profile Index	Name	Recv HrtBt	SNVT Type	Description		
						RT	CSC
135	1	nviSpaceTemp	Yes	SNVT_temp_p	Space Temperature Input	X	X
123	2	nviSetpoint	No	SNVT_temp_p	Temperature Setpoint Input (absolute)	X	X
124	3	nviSetptOffset	Yes	SNVT_temp_p	Setpoint Offset Input	X	X
125	4	nviSetptShift	Yes	SNVT_temp_setpt	Setpoint Shift Input	X	X
114	5	nviOccSchedule	Yes	SNVT_tod_event	Occupancy Scheduler Input	X	X
112	6	nviOccManCmd	No	SNVT_occupancy	Occupancy Override Input	X	X
115	7	nviOccSensor	Yes	SNVT_occupancy	Occupancy Sensor Input	X	X
81	8	nviApplicMode	Yes	SNVT_hvac_mode	Application Mode Input	X	X
103	9	nviHeatCool	Yes	SNVT_hvac_mode	Heat/Cool Mode Input	X	X
87	11	nviComprEnable	Yes	SNVT_switch	Compressor Enable Input	X	X
82	12	nviAuxHeatEnable	Yes	SNVT_switch	Auxiliary Heat Enable Input	X	X
100	13	nviEconEnable	Yes	SNVT_switch	Economizer Enable Input	X	X
102	17	nviEmergOverride	No	SNVT_hvac_emerg	Emergency Override Input	X	X
119	19	nviOutdoorTemp	Yes	SNVT_temp_p	Outdoor Air Temperature Input	X	X
133	20	nviSpaceRH	Yes	SNVT_lev_percent	Space Humidity Input	X	
117	21	nviOutdoorRH	Yes	SNVT_lev_percent	Outdoor Air Humidity Input	X	X
127	22	nviSpaceCO2	Yes	SNVT_ppm	Space VOC or CO2 Sensor Input	X	
110	59	nviOAMinPos	Yes	SNVT_lev_percent	Minimum Position OA Damper Input	X	X

Table 5. SCC network variable outputs

NV#	NV Profile Index	Name	Send HrtBt	SNVT Type	Description	RT	CSC
243	26	nvoSpaceTemp	Yes	SNVT_temp_p	Effective Space Temperature Output	X	X
253	27	nvoUnitStatus	Yes	SNVT_hvac_status	Unit Status Output	X	X
168	28	nvoEffectSetpt	Yes	SNVT_temp_p	Effective Setpoint Output	X	X
167	29	nvoEffectOccup	No	SNVT_occupancy	Effective Occupancy Output	X	X
197	30	nvoHeatCool	Yes	SNVT_hvac_mode	Effective Heat/Cool Output	X	X
235	31	nvoSetpoint	No	SNVT_temp_p	Local Setpoint Output	X	X
195	33	nvoFanSpeed	Yes	SNVT_switch	Fan Speed Output	X	X
160	34	nvoDischAirTemp	No	SNVT_temp_p	Discharge Air Temperature Output	X	X
248	37	nvoTerminalLoad	Yes	SNVT_lev_percent	Terminal Load Output	X	X
199	38	nvoHeatPrimary	Yes	SNVT_lev_percent	Primary Heat Output	X	X
201	39	nvoHeatSecondary	Yes	SNVT_lev_percent	Primary Heat Output	X	
147	40	nvoCoolPrimary	Yes	SNVT_lev_percent	Primary Cool Output	X	X
216	42	nvoOADamper	Yes	SNVT_lev_percent	Outdoor Air Damper Output	X	X
241	43	nvoSpaceRH	Yes	SNVT_lev_percent	Space Humidity Output	X	X
224	44	nvoOutdoorRH	Yes	SNVT_lev_percent	Outdoor Air Humidity Output	X	X
226	45	nvoOutdoorTemp	Yes	SNVT_temp_p	Outdoor Air Temperature	X	X
237	46	nvoSpaceCO2	Yes	SNVT_ppm	Space CO2 Sensor Output	X	X
203	48	nvoHumidifier	Yes	SNVT_lev_percent	Humidifier Output	X	
214	64	nvoMixedAirTemp	Yes	SNVT_temp_p	Mixed Air Temperature Output	X	X
209	65	nvoLocalSpaceTmp	Yes	SMVT_temp_p	Local Space Temperature Output	X	X

Table 6. SCC configuration properties

NV#	NV Profile Index	Name	SCPT/ UCPT Index	SNVT Type	Description	RT	CSC
66	1	nciSndHrtBt	49	SNVT_time_sec	Send Heartbeat	X	X
64	2	nciSetpoints	60	SNVT_temp_setpt	Occupancy Temperature Setpoints	X	X
45	3	nciMinOutTm	52	SNVT_time_sec	Minimum Send Time	X	X
58	4	nciRcvHrtBt	48	SNVT_time_sec	Receive Heartbeat	X	X
41	5	nciLocation	17	SNVT_str_asc	Location Label	X	X
5	6	nciBypassTime	34	SNVT_time_min	Local Bypass Time	X	X
51	8	nciOAMinPos	23	SNVT_lev_percent	Outdoor Air Damper Minimum Position	X	X
68	9	nciSpaceCO2Lim	42	SNVT_ppm	Space CO2 Limit	X	X
76	10	nciSpaceRHSetpt	36	SNVT_lev_percent	Space Humidity Setpoint	X	X
39	20	nciHvacType	169	SNVT_hvac_type	HVAC Unit-Type Identifier	X	X
36	21	nciFanOperation	260	None	Fan Operation	X	X

Table 7. SCC extension network variable inputs

NV#	Name	Recv HrtBt	SNVT Yype	Description		CSC
86	nviBldgStatPress	Yes	SNVT_press_p	Building Static Pressure Input	X	X
89	nviCWFlow	Yes	SNVT_switch	Condenser Water Flow Input		X
84	nviBldgStaticSP	No	SNVT_press_p	Building Static pressure Setpoint Input	X	X
94	nviDAReheatSP	Yes	SNVT_temp_p	Discharge Air Reheat Setpoint	X	
96	nviDehumEnable	Yes	SNVT_switch	Dehumidification Enable Input	X	
105	nviHumEnable	Yes	SNVT_switch	Humidification Enable input	X	
129	nviSpaceDehumSP	No	SNVT_lev_percent	Dehumidification Setpoint Input	X	
131	nviSpaceHumSP	No	SNVT_lev_percent	Space Humidification Setpoint Input	X	

Table 8. SCC extension network variable outputs

NV#	Name	Send HrtBt	SNVT type	Description	RT	CSC
174	nvoEnterWaterTmp	Yes	SNVT_temp_p	Incoming Water Temperature	X	X
213	nvoMATemp	Yes	SNVT_temp_p	Mixed Air Temperature Output	X	
194	nvoExhFanStatus	Yes	SNVT_switch	Exhaust Fan Status Output	X	X
192	nvoExhFanOnOff	Yes	SNVT_switch	Exhaust Fan on/off control output	X	X
140	nvoBldgStatPress	Yes	SNVT_press_p	Building Status Pressure Output	X	X
149	nvoCWFlow	Yes	SNVT_switch	Condenser Water Flow Output		X
151	nvoCWPump	Yes	SNVT_switch	Condenser Water Pump Output		X
219	nvoOAEnthalpy	Yes	SNVT_enthalpy	Outdoor Air Enthalpy Output	X	X
222	nvoOccSchedule	Yes	SNVT_Tod_Event	A structure to report the Occupancy Mode of the controller	X	X
228	nvoRATemp	Yes	SNVT_temp_p	Return Air Temperature Output	X	X
239	nvoSpaceEnthalpy	Yes	SNVT_enthalpy	Space Enthalpy Output	X	X
143	nvoCondCap	Yes	SNVT_lev_percent	Condenser Capacity Output	X	X
153	nvoCWTemp	Yes	SNVT_temp_p	Condenser Water Temperature Output	X	X
156	nvoDAReheatSP	Yes	SNVT_temp_p	Discharge Air Reheat Setpoint	X	
158	nvoDehumidifier	Yes	SNVT_switch	Dehumidification Status Output	X	
170	nvoEffSpaceDHSP	Yes	SNVT_lev_percent	Effective Space Dehumidification Setpoint Output	X	
NV#	**Name**	**Send HrtBt**	**SNVT Type**	**Description**	**RT**	**CSC**
172	nvoEffSpaceHumSP	Yes	SNVT_lev_percent	Effective Space Humidification Setpoint Output	X	
176	nvoEREABPDamper	Yes	SNVT_lev_percent	Energy Recovery Exh Bypass Damper Output	X	
178	nvoERFrostAvoid	Yes	SNVT_switch	Energy Recovery Frost Avoidance Output	X	
180	nvoERLvgExhTemp	Yes	SNVT_temp_p	Energy Recovery Leaving Exh Temp Output	X	
182	nvoEROABPDamper	Yes	SNVT_lev_percent	Energy Recovery OA Bypass Damper Output	X	
184	nvoERPreheat	Yes	SNVT_switch	Energy Recovery Preheat On/Off Control Output	X	
186	nvoERStatus	Yes	SNVT_switch	Energy Recovery Status Output	X	
190	nvoExhDamper	Yes	SNVT_lev_percent	Exhaust Damper Control Output	X	X
205	nvoLocalCWTemp	Yes	SNVT_temp_p	Local Condenser Water Temperature	X	X
230	nvoRetFanOnOff	Yes	SNVT_switch	Return Fan On/Off Control Output	X	
232	nvoRetFanPress	Yes	SNVT_press_p	Return Fan Pressure Output	X	
234	nvoRetFanStatus	Yes	SNVT_switch	Return Fan Status Output	X	

Table 9. SCC extension configuration properties

NV#	Name	SCPT/ UCPT Index	SNVT Type	Description		CSC
31	nciExhaustConfig	8	SNVT_lev_percent	Exhaust Enable Position	X	X
3	nciBldgStaticSP	193	SNVT_press_p	Building Static Pressure Setpoint	X	X
9	nciCoolLockout	209	SNVT_temp_p	Cooling lockout temperature setpoint	X	X
16	nciDAReheatSP	34	SNVT_temp_p	Discharge Air Reheat Setpoint	X	
43	nciMinOAFlowSP	198	SNVT_flow	Minimum Outdoor Air Flow Setpoint	X	X
47	nciOAEnthSP	200	SNVT_enthalpy	Outdoor Air Enthalpy Setpoint	X	X
49	nciOAFlowCalib	67	SNVT_multiplier	Outdoor Air Flow Calibration	X	X
62	nciRetFanPressSP	194	SNVT_press_p	Return Fan Pressure Setpoint	X	
73	nciSpaceHumSP	203	SNVT_lev_percent	Space Humidification Setpoint	X	
30	nciERFrostAvoidSP	40	SNVT_temp_p	Energy Recovery Frost Avoidance Setpoint	X	

Network Variable Summary– DAC

Table 10. DAC network variable inputs

NV#	NV Profile Index	Name	Recv HrtBt	SNVT Type	Description	RT	CSC
113	1	nviOccSchedule	Yes	SNVT_tod_event	Occupancy Scheduler Input	X	X
111	2	nviOccManCmd	No	SNVT_occupancy	Occupancy Override Input	X	X
80	3	nviApplicMode	Yes	SNVT_hvac_mode	Application Mode Input	X	X
101	4	nviEmergOverride	No	SNVT_hvac_emerg	Emergency Override Input	X	X
98	5	nviDuctStatPress	Yes	SNVT_press_p	Duct Static Pressure Input	X	X
97	6	nviDuctStaticSP	No	SNVT_press_p	Duct Static Pressure Setpoint Input	X	X
90	7	nviDAClSP	No	SNVT_temp_p	Discharge Air Cooling Setpoint Input	X	X
92	8	nviDAHtSP	No	SNVT_temp_p	Discharge Air Heating Setpoint Input	X	X
85	13	nviBldgStatPress	Yes	SNVT_press_p	Building Static Pressure Input	X	X
83	14	nviBldgStaticSP	No	SNVT_press_p	Building Static Pressure Setpoint Input	X	X
120	15	nviPriCoolEnable	Yes	SNVT_switch	Primary Cool Enable Input	X	X
121	16	nviPriheatEnable	Yes	SNVT_switch	Primary Heat Enable Input	X	X
99	17	nviEconEnable	Yes	SNVT_switch	Economizer Enable Input	X	X
109	18	nviOAMinPos	No	SNVT_lev_percent	Outdoor Air Minimum Position Input	X	X
108	19	nviMinOAFlowSP	No	SNVT_flow	Minimum Outdoor Air Flow Setpoint Input	X	X
118	20	nviOutdoorTemp	Yes	SNVT_temp_p	Outdoor Air Temperature Input	X	X
116	21	nviOutdoorRH	Yes	SNVT_lev_percent	Outdoor Air Humidity Input	X	X
134	26	nviSpaceTemp	Yes	SNVT_temp_p	Space Temperature Input	X	X
132	27	nviSpaceRH	Yes	SNVT_lev_percent	Space Humidity Input		
104	28	nviHumEnable	Yes	SNVT_switch	Humidification Enable Input	X	
130	29	nviSpaceHumSP	No	SNVT_lev_percent	Space Humidification Setpoint Input	X	
95	30	nviDehumEnable	Yes	SNVT_switch	Dehumidification Enable Input	X	
128	31	nviSpaceDehumSP	No	SNVT_lev_percent	Space Dehumidification Setpoint Input		
91	32	nviDADewpointSP	No	SNVT_temp_p	Discharge Air Dewpoint Setpoint Input		
88	34	nviCWFlow	Yes	SNVT_switch	Condenser Water Flow Input		X

Table 11. DAC network variable outputs

NV#	NV Profile Index	Name	Recv HrtBt	SNVT Type	Description	Product	
						RT	CSC
159	35	nvoDischAirTemp	Yes	SNVT_temp_p	Discharge Air Temperature Output	X	X
252	36	nvoUnitStatus	Yes	SNVT_hvac_status	Unit Status Output	X	X
164	37	nvoEffDATempSP	Yes	SNVT_temp_p	Effective Discharge Air Temperature Setpoint Output	X	X
161	38	nvoDuctStatPress	Yes	SNVT_press_p	Duct Static Pressure Output	X	X
165	39	nvoEffDuctStatSP	Yes	SNVT_press_p	Effective Duct Static Pressure Setpoint Output	X	X
196	40	nvoHeatCool	Yes	SNVT_hvac_mode	Effective Heat/Cool Output	X	X
138	41	nvoApplicMode	Yes	SMVT_hvac_mode	Application Mode Output	X	X
166	42	nvoEffectOccup	Yes	SNVT_occupancy	Effective Occupancy Output	X	X
246	43	nvoSupFanStatus	Yes	SNVT_switch	Supply Fan Status Output	X	X
245	44	nvoSupFanOnOff	Yes	SNVT_lev_percent	Supply Fan On/Off Control Output	X	X
193	46	nvoExhFanStatus	Yes	SNVT_switch	Exhaust Fan Status Output	X	X
191	47	nvoExhFanOnOff	Yes	SNVT_switch	Exhaust Fan On/Off Control Output	X	X
189	49	nvoExhDamper	Yes	SNVT_lev_percent	Exhaust Damper Control Output	X	X
233	50	nvoRetFanStatus	Yes	SNVT_switch	Return Fan Status Output	X	
229	51	nvoRetFanOnOff	Yes	SNVT_switch	Return Fan On/Off Control Output	X	
231	53	nvoRetFanPress	Yes	SNVT_press_p	Return Fan Pressure Output	X	
139	54	nvoBldgStatPress	Yes	SNVT_press_p	Building Static Pressure Output	X	X
162	55	nvoEconEnabled	Yes	SNVT_switch	Economizer Enabled Output	X	X
215	56	nvoOADamper	Yes	SNVT_lev_percent	Outdoor Air Damper Output	X	X
220	57	nvoOAFlow	Yes	SNVT_flow	Outdoor Air Flow Output	X	X
208	58	nvoLocalOATemp	Yes	SNVT_temp_p	Local Outdoor Air Temperature Output	X	X
225	59	nvoOutdoorTemp	Yes	SNVT_temp_p	Outdoor Air Temperature Output	X	X
207	60	nvoLocalOARH	Yes	SNVT_lev_percent	Local Outdoor Air Humidity Output	X	X
NV#	NV Profile Index	Name	Recv HrtBt	SNVT Type	Description	Product	
						RT	CSC
223	61	nvoOutdoorRH	Yes	SNVT_lev_percent	Outdoor Air Humidity Output	X	X
218	62	nvoOAEnthalpy	Yes	SNVT_enthalpy	Outdoor Air Enthalpy Output	X	X
146	63	nvoCoolPrimary	Yes	SNVT_lev_percent	Primary Cooling Output	X	X
198	64	nvoHeatPrimary	Yes	SNVT_lev_percent	Primary Heating Output	X	X
212	65	nvoMATemp	Yes	SNVT_temp_p	Mixed Air Temperature Output	X	X
242	66	nvoSpaceTemp	Yes	SNVT_temp_p	Space Temperature Output	X	X
227	67	nvoRATemp	Yes	SNVT_temp_p	Return Air Temperature Output	X	X
240	68	nvoSpaceRH	Yes	SNVT_lev_percent	Space Humidity Output	X	X
238	69	nvoSpaceEnthalpy	Yes	SNVT_enthalpy	Space Enthalpy Output	X	X
171	70	nvoEffSpaceHumSP	Yes	SNVT_lev_percent	Effective Space Humidification Setpoint Output	X	

Table 11. DAC network variable outputs (continued)

202	71	nvoHumidifier	Yes	SNVT_lev_percent	Humidification Status Output	X	
169	72	nvoEffSpaceDHSP	Yes	SNVT_lev_percent	Effective Space Dehumidification Setpoint Output	X	
157	73	nvoDehumidifier	Yes	SNVT_switch	Dehumidification Status Output	X	
163	74	nvoEffDADewPtSP	Yes	SNVT_temp_p	Effective Discharge Air Dewpoint Setpoint Output		
154	75	nvoDADewPoint	Yes	SNVT_temp_p	Discharge Air Dewpoint Temperature Output		
142	76	nvoCondCap	Yes	SNVT_lev_percent	Condenser Capacity Output	X	X
204	77	nvoLocalCWTemp	Yes	SNVT_temp_p	Local Condenser Water Temperature Output	X	X
152	78	nvoCWTemp	Yes	SNVT_temp_p	Condenser Water Temperature Output	X	X
148	79	nvoCWFlow	Yes	SNVT_switch	Condenser Water Flow Output	X	X
150	80	nvoCWPump	Yes	SNVT_switch	Condenser Water Pump Output	X	X

Table 12. DAC configuration properties

NV#	NV Profile Index	Name	SCPT/ UCPT Index	SNVT Type	Description	RT	CSC
65	1	nciSndHrtBt	49	SNVT_time_sec	Send Heartbeat	X	X
12	2	nciDAClSP	183	SNVT_temp_p	Discharge Air Cooling Setpoint	X	X
14	3	nciDAHtSP	184	SNVT_temp_p	Discharge Air Heating Setpoint	X	X
63	4	nciSetpoints	60	SNVT_temp_setpt	Occupancy Temperature Setpoints	X	X
44	5	nciMinOutTm	52	SNVT_time_sec	Minimum Send Time	X	X
57	6	nciRcvHrtBt	48	SNVT_time_sec	Receive Heartbeat	X	X
40	7	nciLocation	17	SNVT_str_asc	Location Label	X	X
5	8	nciBypassTime	34	SNVT_time_min	Local Bypass Time	X	X
24	13	nciDuctStatSP	189	SNVT_press_p	Duct Static Pressure Setpoint	X	X
23	16	nciDuctStatLim	192	SNVT_press_p	Duct Static Pressure Limit	X	X
2	17	nciBldgStaticSP	193	SNVT_press_p	Building Static Pressure Setpoint	X	X
61	18	nciRetFanPressSP	194	SNVT_press_p	Return Fan Pressure Setpoint	X	
50	23	nciOAMinPos	23	SNVT_lev_percent	Outdoor Air Damper Minimum Position	X	X
42	24	nciMinOAFlowSP	198	SNVT_flow	Minimum Outdoor Air Flow Setpoint	X	X
48	25	nciOAFlowCalib	67	SNVT_multiplier	Outdoor Air Flow Calibration	X	X
52	27	nciOATSP	199	SNVT_temp_p	Outdoor Air Temperature Setpoint	X	X
46	28	nciOAEnthSP	200	SNVT_enthalpy	Outdoor Air Enthalpy Setpoint	X	X
34	30	nciExhStartPos	202	SNVT_lev_percent	Exhaust Enable Position	X	X
72	31	nciSpaceHumSP	203	SNVT_lev_percent	Space Humidification Setpoint	X	
71	32	nciSpaceDehumSP	36	SNVT_lev_percent	Space Dehumidification Setpoint	X	
13	33	nciDADewPointSP	204	SNVT_temp_p	Discharge Air Dewpoint Setpoint		
8	38	nciCoolLockout	209	SNVT_temp_p	Cooling Lockout Temperature Setpoint	X	X
10	40	nciCoolResetEn	211	SNVT_switch	Cooling Reset Enable	X	X
37	41	nciHeatResetEn	212	SNVT_switch	Heating Reset Enable	X	X

Table 13. DAC extension network variable inputs

NV#	Name	Recv HrtBt	SNVT Type	Description		CSC
93	nviDAReheatSP	Yes	SNVT_temp_p	Discharge Air Reheat Setpoint	X	
126	nviSpaceCO_2	Yes	SNVT_ppm	Space CO_2 Sensor Input	X	

Table 14. DAC extension network variable outputs

NV#	Name	Send HrtBt	SNVT Type	Description		CSC
247	nvoTerminalLoad	Yes	SNVT_lev_percent	Terminal Load output	X	X
206	nvoLocalDSPress	Yes	SNVT_press_p	Local Duct Static Pressure Output	X	X
236	nvoSpaceCO2	Yes	SNVT_ppm	Space CO2 Sensor Output	X	X
173	nvoEnterWaterTmp	Yes	SNVT_temp_p	Entering Water Temperature Output		X
155	nvoDAReheatSP	Yes	SNVT_temp_p	Discharge Air Reheat Setpoint		
217	nvoOADewpoint	Yes	SNVT_temp_p	Outdoor Air Dewpoint		
175	nvoEREABPDamper	Yes	SNVT_lev_percent	Energy Recovery Exhaust Air Bypass Damper Position Output	X	
177	nvoERFrostAvoid	Yes	SNVT_switch	Energy Recovery Frost Avoidance State	X	
179	nvoERLvgExhTemp	Yes	SNVT_temp_p	Energy Recovery Leaving Exhaust Temp Output	X	
181	nvoEROABPDamper	Yes	SNVT_lev_percent	Energy Recovery Outside Air Bypass Damper Position Output	X	
183	nvoERPreheat	Yes	SNVT_switch	Energy Recovery Preheat On/Off Control Output	X	
185	nvoERStatus	Yes	SNVT_switch	Energy Recovery Status Output	X	
200	nvoHeatSecondary	Yes	SNVT_lev_percent	Secondary Heat Output	X	

Table 15. Product extension network variable outputs

NV#	Name	Recv HrtBt	Description		CSC
210	nvoMasterSlave1	Yes	Master Slave Output #1 (bound on cluster slaves)	X	
211	nvoMasterSlave2	Yes	Master Slave Output #2 (bound on cluster slaves)	X	

Table 16. DAC extension configuration properties

NV#	Name	SCPT/ UCPT Index	SNVT Type	Description		CSC
38	nciHvacType	169	SNVT_hvac_type	HVAC Unit Type Identifier	X	X
17	nciDaytime	6	SNVT_Temp_p	Daytime Warm-up Initiate Setpoint	X	X
18	nciDaytimeTerm	15	SNVT_Temp_p	Daytime Warm-up Terminate Setpoint	X	X
15	nciDAReheatSP	17	SNVT_Temp_p	Discharge Air Reheat Setpoint	X	
29	nciERFrostAvoidSP	20	SNVT_Temp_p	Energy Recovery Frost Avoidance Setpoint	X	
67	nciSpaceCO2Lim	42	SNVT_ppm	Space CO_2 High Limit Setpoint	X	X

Network Variable Input Definitions

The network variable input definitions in this section are listed alphabetically by the *nviName*, such as *nviApplicMode*. When an nvi is invalid, the unit will decide proper operation based on its local inputs.

Application Mode Input: nviApplicMode

Network Input: SNVT_hvac_mode nviApplicMode (SCC and DAC profile)

Used to coordinate the controller with any supervisory controller. The default value is adopted at power-up and in the event of not receiving an update within the specified receive heartbeat time. Refer to the tables in the "Appendix," p. 96 for details about Application Mode Input. Default service type = unacknowledged.

For the HVAC_FAN_ONLY enumeration, heating and cooling are locked out and will override nviAuxHeatEnable, nviComprEnable, nviPriCoolEnable, and nviPriHeatEnable. HVAC_DEHUMIDIFICATION (14) is not supported in nviApplicMode by IntelliPak products because dehumidification is activated only by setpoints and space conditions. The unit should be unoccupied before sending the HVAC_MRNG_WRMUP, HVAC_NIGHT_PURGE, or HVAC_PRE_COOL.

Table 17. Application Mode Input valid ranges

Type	RT/CSC Ranges	Invalid Values
U08	0 = HVAC_AUTO[a] 1 = HVAC_HEAT[a] 2 = HVAC_MRNG_WRMUP[a] 3 = HVAC_COOL[a] 4 = HVAC_NIGHT_PURGE[a] 5 = HVAC_PRE_COOL[a] 6 = HVAC_OFF[a] 7 = HVAC_TEST (HVAC_AUTO) 8 = HVAC_EMERG_HEAT (HVAC_AUTO) 9 = HVAC_FAN_ONLY[a] 10 = HVAC_FREE_COOL (HVAC_AUTO) 11 = HVAC_ICE (HVAC_AUTO) 12 = HVAC_MAX_HEAT (HVAC_AUTO) 13 = HVAC_ECONOMIZING (HVAC_AUTO) 14 = HVAC_DEHUMIDIFICATION (HVAC_AUTO) 15 = HVAC_CALIBRATE (HVAC_AUTO) 16 to 255 = HVAC_NUL[a]	0xFF = HVAC_NUL[b]

(a) Indicates products used only with IntelliPak RT and CSC
(b) HVAC_NUL is the same as HVAC_AUTO

Table 18. Application Mode Input network variable interaction

Network Variable	nviApplicMode = HVAC_MRNG_WRMUP (SCC units or DAC units with modulating gas, hydronic, or Intellipak II staged electric heat) [a][c]	nviApplicMode = HVAC_MRNG_WRMUP (DAC units with staged gas or electric heat)[b][c]	nviApplicMode = HVAC_PRE_COOL[c]	nviApplicMode = HVAC_NIGHT_PURGE[c]
nviAuxHeatEnable	Honored	Honored	Overridden to disabled	Overridden to disabled
nviComprEnable	Overridden to disabled	Overridden to disabled	Honored	Overridden to disabled
nviEconEnable	Overridden to disabled	Overridden to disabled	Honored	Honored
nviOAMinPos	Overridden to zero	Overridden to zero	Overridden to zero	Overridden to zero
nviOccManCmd	Overridden to occupied	Overridden to occupied	Overridden to occupied	Overridden to occupied
nviOccSchedule	Overridden to occupied	Overridden to occupied	Overridden to occupied	Overridden to occupied
nviOccSensor	Overridden to occupied	Overridden to occupied	Overridden to occupied	Overridden to occupied

Table 18. Application Mode Input network variable interaction (continued)

nviPriCoolEnable	Overridden to disabled	Overridden to disabled	Honored	Overridden to disabled
nviPriHeatEnable	Honored	Honored	Overridden to disabled	Overridden to disabled
nvoApplicMode	HVAC_MRNG_WRMUP	HVAC_MAX_HEAT[d]	HVAC_PRE_COOL	HVAC_NIGHT_PURGE
nvoEffectOccup	OC_OCCUPIED	OC_OCCUPIED	OC_OCCUPIED	OC_UNOCCUPIED[e]
nvoHeatCool	HVAC_MRNG_WRMUP	HVAC_MAX_HEAT[d]	HVAC_PRE_COOL	HVAC_NIGHT_PURGE
nvoOccSchedule	OC_OCCUPIED	OC_OCCUPIED	OC_OCCUPIED	OC_UNOCCUPIED[e]
nvoUnitStatus.mode	HVAC_MRNG_WRMUP	HVAC_MAX_HEAT[d]	HVAC_PRE_COOL	HVAC_NIGHT_PURGE

(a) Must **disable** the morning warm-up function at the human interface general unit functions setup submenu.
(b) Must **enable** the morning warm-up function at the human interface general unit functions setup submenu.
(c) **HVAC_MRNG_WRMUP_PRE_COOL** and **HVAC_NIGHT_PURGE** should be sent **only** when the unit is in unoccupied mode.
(d) If t he unit is unoccupied or **OFF** before receiving **HVAC_MRNG_WRMUP** and the space temperature is below the morning warm-up setpoint, the unit will transition into native morning warm-up mode and report **HVAC_MAX_HEAT**. Otherwise, it will report **HVAC_MRNG_WRMUP**.
(e) When the communicated occupancy indicates **unoccupied mode** (*Normal*), the unit is actually in **occupied mode** as displayed on the human interface. This is required because the design of the IntelliPak unit controller provides **only** duct static pressure control and economizing to the discharge air temperature setpoint in occupied mode.

Auxiliary Heat Enable Input: nviAuxHeatEnable

Network Input: SNVT_switch nviAuxHeatEnable (SCC profile; refer to "Primary Heat Enable Input: nviPriHeatEnable")

A structure used by space temp controllers to enable or disable or limit any type of mechanical heat on the heat output. A discharge air controller uses nviPriHeatEnable. An invalid value is adopted at power-up and in the event of not receiving an update within the specified receive heartbeat time. Default service type = unacknowledged.

For all IntelliPak CSC products and older IntelliPak RT products *(LCI-I software version 13.x or lower and/or HEAT software version 10 or lower)*, this is a binary enable/disable input. For newer IntelliPak RT products *(LCI-I software version 14.x or higher and HEAT software version 11.x or higher)*, the percent enabled is also supported. Heating can also be locked out by setting nviApplicMode or nviHeatCool to HVAC_FAN_ONLY *(or HVAC_NIGHT_PURGE or HVAC_PRE_COOL with LCI-I software version 14.x or higher).*

Table 19. Network Heat Enable Input valid ranges

State	Value	Equivalent	Heat Output Operation
0	Any value	0.0%	Disabled
1	0	0.0%	Disabled
1	1 to 199	0.5% to 99.5%	Enabled, 1% to 100%
1	200 to 255	100.0%	Enabled, no limit
• 0xFF (invalid value) • 2 to 127 • -128 to -2	Any value	100.0%	Enabled, No limit (invalid)

Building Static Pressure Setpoint Input: nviBldgStaticSP

Network Input: SNVT_press_p nviBldgStaticSP (SCCX and DAC profile)

Used to connect a network output from another controller to provide the building Static Pressure Setpoint. When valid, this input will have priority over any locally provided building static pressure setpoint. An invalid value is adopted at power-up until an update is received. Does not use the receive heartbeat function. Default service type = unacknowledged.

IntelliPak products must have the 100% power exhaust with Statitrac option for nviBldgStaticSP to be utilized. Newer IntelliPak RT products *(VCM 4.x and higher and LCI-I software version 14.x and higher)* support a lower *(negative)* building pressure setpoint range. For SCC units controlled by Tracer Summit, nviBldgStaticSP *(if present)* may be overridden by a Trane proprietary profile extension variable.

- Range:
  - 8 Pa to 74 Pa (RT1, CSC)
  - -49 Pa to 74 Pa (RT2)
- Invalid Value: 0x7FFF = 32767 Pa

Building Static Pressure Input: nviBldgStatPress

Network Input: SNVT_press_p nviBldgStatPress (SCCX and DAC profile)

Used to connect a network building static pressure sensor network output from another controller. When a building static pressure sensor is locally wired to the controller, nviBldgStatPress has priority if a valid value is present. An invalid value is adopted at power-up and in the event of not receiving an update within the specified receive heartbeat time. Default service type = unacknowledged.

IntelliPak products must have the 100% power exhaust with Statitrac option for nviBldgStatPress to be utilized. Newer IntelliPak RT products *(ECEM 11.x and higher and LCI-I software version 14.x and higher)* support an expanded pressure range.

- Range:
  - -69 Pa to 124 Pa (RT1, CSC)
  - 166 Pa to 166 Pa (RT2)
- Invalid Value: 0x7FFF = 32767 Pa

Compressor Enable Input: nviComprEnable

Network Input: SNVT_switch nviComprEnable (SCC profile; refer to "Primary Cool Enable Input: nviPriCoolEnable")

A structure used by space temp controllers to enable or disable or limit any type of mechanical cooling on the cool output. A discharge air controller uses nviPriCoolEnable. An invalid value is adopted at power-up and in the event of not receiving an update within the specified receive heartbeat time. Default service type = unacknowledged.

For all IntelliPak CSC and FAU products and older IntelliPak RT products (*LCI-I software version 13.x and lower, SCM software version 7.x or lower, or MCM software version 14.x or lower*), this is a binary enable/disable input. For newer IntelliPak RT products *(LCI-I software version 14.x or higher, SCM software version 8.x or higher, or MCM software version 15.x or higher)*, the percent enabled is also supported. Cooling can also be locked out by setting nviApplicMode or nviHeatCool to HVAC_FAN_ONLY *(or HVAC_MRNG_WRMUP or HVAC_NIGHT_PURGE with LCI-I software version 14.x or higher).*

Table 20. Compressor Enable Input valid ranges

State	Value	Equivalent	Heat Output Operation
0	Any value	0.0%	Disabled
1	0	0.0%	Disabled
1	1 to 199	0.5% to 99.5%	Enabled, 1% to 100%
1	200 to 255	100.0%	Enabled, no limit
• 0xFF (invalid value) • 2 to 127 • -128 to -2	Any value	100.0%	Enabled, no limit (invalid)

Condenser Waterflow Input: nviCWFlow

Network Input: SNVT_switch nviCWFlow (SCCX and DAC profile)

Indicates the system condenser water flow status provided by a network sensor or network output from another controller. When valid, nviCWFlow will have priority over any locally provided condenser water flow status. An invalid value is adopted at power-up and in the event of not receiving an update within the specified receive heartbeat time.

Default service type = unacknowledged.

Note: *Only IntelliPak products with water-cooled condenser and/or water-side economizer utilize nviCWFlow.*

Table 21. Condenser Waterflow Input valid ranges

State	Value	Equivalent	Condenser Waterflow	Meaning
0	Any value	0.0%	No	Water not flowing.
1	0	0.0%	No	Water not flowing.
1	1 to 199	0.5% to 99.5%	Yes	Water is flowing.
1	200 to 255	100.0%	Yes	Water is flowing.
• 0xFF (invalid value) • 2 to 127 • -128 to -2	00 (invalid value)	NA	Invalid	Invalid, use local waterflow switch (if installed).

Dehumidification Enable Input: nviDehumEnable

Network Input: SNVT_switch nviDehumEnable (SCCX and DAC profile)

Used to enable the dehumidification function in the controller. It is typically set by a supervisory node. The default value is adopted at power-up and in the event of not receiving an update within the specified receive heartbeat time. Default service type = unacknowledged.

IntelliPak products with a dehumidification option utilize nviDehumEnable and only to enable/disable dehumidification. Enabling dehumidification does not force the unit to actively dehumidify, since dehumidification is activated by setpoint and space conditions.

Table 22. Dehumidification Enable Input valid ranges

State	Value	Humidification	Meaning
0	Any value	Disabled	No dehumidification.
1	0	Disabled	No dehumidification.
1	1 to 255	Enabled	Dehumidification.
0xFF (default)	Any Value	Enabled (invalid)	Controller decision.

Discharge Air Cooling Setpoint Input: nviDACISP

Network Input: SNVT_temp_p nviDACISP (DAC profile)

Used to set the discharge air cooling setpoint of the controller. An invalid value is adopted at power-up until an update is received. Does not use the receive heartbeat function. Default service type = unacknowledged.

- Range: 6.11°C to 60°C (43°F to 140°F)
- Invalid Value: 0x7FFF = 327.67°C

Discharge Air DewPoint Setpoint Input: nviDADewPointSP

Network Input: SNVT_temp_p nviDADewPointSP (DAC profile)

Used to set the discharge air dewpoint setpoint of the controller. When valid, this input will have priority over any locally provided discharge air dewpoint setpoint. An invalid value is adopted at power-up until an update is received. Does not use the receive heartbeat function. Default service type = unacknowledged.

IntelliPak Rooftop dehumidification is activated by setpoint *(nviSpaceDehumSP)* and space conditions.

- Range: 7.22°C to 23.89°C (45°F to 75°F)
- Default: 0x7FFF = 327.67°C
- Invalid Value: 0x7FFF = 327.67°C

Discharge Air Heating Setpoint Input: nviDAHtSP

Network Input: SNVT_temp_p nviDAHtSP (DAC profile)

This input network variable is used to set the discharge air reheat setpoint. Default service type = unacknowledged.

- Range: 4.44°C to 82.22°C (40°F to 180°F)
- Default: 0x7FFF = 327.67°C
- Invalid Value: 0x7FFF = 327.67°C

Discharge Air Reheat Setpoint Input: nviDAReheatSP

Network Input: SNVT_temp_p nviDAReheatSP (SCCX and DACX profile)

This input network variable is used to set the discharge air reheat setpoint. Default service type = unacknowledged. Only IntelliPak Rooftop products with a modulating dehumidification option utilize nviDAReheatSP.

- Range: 18.34°C to 26.66°C (65°F to 80°F) [RT]
- Default: 0x7FFF = 327.67°C
- Invalid Value: 0x7FFF = 327.67°C

Duct Static Pressure Setpoint Input: nviDuctStaticSP

Network Input: SNVT_press_p nviDuctStaticSP (DAC profile)

Used to set the duct static pressure setpoint of the controller. An invalid value is adopted at power-up until an update is received. Does not use the receive heartbeat function. Default service type = unacknowledged.

- Range:
  - 175 Pa to 1,071 Pa (0.7 to 4.3 IWC) [RT, CSC]
  - 175 Pa to 1,270 Pa (0.7 to 5.1 IWC) [RT2]
- Default: 0x7FFF = 32,767 Pa
- Invalid Value: 0x7FFF = 32,767 Pa

Duct Static Pressure Input: nviDuctStatPress

Network Input: SNVT_press_p nviDuctStatPress (DAC profile)

Used to connect a duct static pressure sensor or network output from another controller. The default value is adopted at power-up and in the event of not receiving an update within the specified receive heartbeat time. Default service type = unacknowledged.

IntelliPak RT and CSC products use this for duct static pressure control, but continue to use the factory-installed sensor for high-limit protection. Newer IntelliPak RT products *(VCM 4.x and higher and LCI-I software version 14.x and higher)* support an expanded pressure range.

- Range:
  - 0 Pa to 1,245 Pa (0 to 5 IWC) [RT, CSC]
  - 0 Pa to 167 Pa (0 to 7.9 IWC) [RT2]
- Default: 0x7FFF = 32,767 Pa
- Invalid Value: 0x7FFF = 32,767 Pa

Economizer Enable Input: nviEconEnable

Network input: SNVT_switch nviEconEnable (SCC and DAC profile)

A structure used to enable and disable economizer operation. An invalid value is adopted at power-up and in the event of not receiving an update within the specified receive heartbeat time. Default service type = unacknowledged.

Table 23. Economizer Enable Input valid ranges

State	Value	Humidification	Meaning
0	Any value	Disabled	No economizing.
1	0	Disabled	No economizing.
1	1 to 255	Enabled	Economizing in the first stage of cooling.
• 0xFF (invalid value) • 2 to 127 • -128 to -2	00 (invalid value)	Auto (invalid)	Unit controller decision as to whether economizing is possible.

Emergency Override Input: nviEmergOverride

Network Input: SNVT_hvac_emerg nviEmergOverride (SCC and DAC profile)

Used to command the device into different emergency modes. an invalid value is adopted at power-up until an update is received. Does not use the receive heartbeat function. Default service type = unacknowledged.

For IntelliPak products, the emergency override input has a lower priority than ventilation override requests from the ventilation override module (VOM) *[if installed]*, the Local Human Interface Stop button, and the Emergency Stop input. Emergency override is initialized to EMERG_NUL on power up. The range 6 through 254 is manufacturer-defined to be EMERG_NUL. If a VOM module is installed and an emergency override is requested, the VOM binary output is closed.

Heat/Cool Mode Input: nviHeatCool

Network input; SNVT_hvac_mode nviHeatCool (SCC profile)

Used to coordinate the space temp controller with any node that may need to control the heat/cool changeover of the unit. This input is overridden by nviApplicMode unless nviApplicMode is HVAC_AUTO, HVAC_TEST, or HVAC_NUL. If nviApplicMode is HVAC_AUTO or HVAC_NUL, then

nviHeatCool determines the Effective Mode of the Unit. Refer to "Appendix," p. 96 for detailed information about the utilization of nviHeatCool.

The default value is adopted at power-up and in the event of not receiving an update within the specified receive heartbeat time. Default service type = unacknowledged.

For IntelliPak Rooftop or CSC products: the enumerations HVAC_TEST, HVAC_EMERG_HEAT, HVAC_FREE_COOL, HVAC_ICE, HVAC_ECONOMIZING, HVAC_DEHUMIDIFICATION, HVAC_NUL, and the range 15 to 254 are manufacturer-defined to be the same as HVAC_AUTO. The unit should be unoccupied before sending the HVAC_MRNG_WRMUP, HVAC_NIGHT_PURGE, or HVAC_PRE_COOL.

For the HVAC_FAN_ONLY: the enumeration, heating and cooling are locked out. IntelliPak products do not honor HVAC_DEHUMIDIFICATION as dehumidification is activated by setpoint and space conditions.

For IntelliPak Rooftop or CSC products *(LCI-I software version 14.x or higher)* when nviApplicMode = HVAC_AUTO or HVAC_NUL and nviHeatCool = HVAC_MRNG_WRMUP, HVAC_NIGHT_PURGE, or HVAC_PRE_COOL, refer to the table below for network variable interaction.

Table 24. Network variable interaction

Network variable	nviApplicMode = HVAC_AUTO or HVAC_NUL and nviHeatCool = HVAC_MRNG_WRMUP (SCC units or DAC units with modulating gas, hydronic, or Intellipak II staged electric heat) [a]	nviApplicMode = HVAC_AUTO or HVAC_NUL and nviHeatCool = HVAC_MRNG_WRMUP (DAC units with staged gas or electric heat)[b]	nviApplicMode = HVAC_AUTO or HVAC_NUL and nviHeatCool = HVAC_PRE_COOL	nviApplicMode = HVAC_AUTO or HVAC_NUL and nviHeatCool = HVAC_NIGHT_PURGE
nviAuxHeatEnable	Honored	Honored	Overridden to disabled	Overridden to disabled
nviComprEnable	Overridden to disabled	Overridden to disabled	Honored	Overridden to disabled
nviEconEnable	Overridden to disabled	Overridden to disabled	Honored	Honored
nviOAMinPos	Overridden to zero	Overridden to zero	Overridden to zero	Overridden to zero
nviOccManCmd	Overridden to occupied	Overridden to occupied	Overridden to occupied	Overridden to occupied
nviOccSchedule	Overridden to occupied	Overridden to occupied	Overridden to occupied	Overridden to occupied
nviOccSensor	Overridden to occupied	Overridden to occupied	Overridden to occupied	Overridden to occupied
nviPriCoolEnable	Overridden to disabled	Overridden to disabled	Honored	Overridden to disabled
nviPriHeatEnable	No overridden	Not overridden	Overridden to enabled	Overridden to disabled
nvoApplicMode	HVAC_MRNG_WRMUP	HVAC_MAX_HEAT[c]	HVAC_PRE_COOL	HVAC_NIGHT_PURGE
nvoEffectOccup	OC_OCCUPIED	OC_OCCUPIED	OC_OCCUPIED	OC_UNOCCUPIED
nvoHeatCool	HVAC_MRNG_WRMUP	HVAC_MAX_HEAT[c]	HVAC_PRE_COOL	HVAC_NIGHT_PURGE
nvoOccSchedule	OC_OCCUPIED	OC_OCCUPIED	OC_OCCUPIED	OC_UNOCCUPIED
nvoUnitStatus.mode	HVAC_MRNG_WRMUP	HVAC_MAX_HEAT[c]	HVAC_PRE_COOL	HVAC_NIGHT_PURGE

(a) Must **disable** the morning warm-up function at the human interface general unit functions setup submenu.
(b) Must **enable** the morning warm-up function at the human interface general unit functions setup submenu.
(c) If t he unit is unoccupied or **OFF** before receiving **HVAC_MRNG_WRMUP** and the space temperature is below the morning warm-up setpoint, the unit will transition into native morning warm-up mode and report **HVAC_MAX_HEAT**. Otherwise, it will report **HVAC_MRNG_WRMUP**.

Humidification Enable Input: nviHumEnable

Network Input: SNVT_switch nviHumEnable (SCCX and DAC profile)

Used to enable the humidification function in the controller. It is typically set by a supervisory node. The default value is adopted at power-up and in the event of not receiving an update within the specified receive heartbeat time. Default service type = unacknowledged.

Only IntelliPak RT products *(RTM software version 24.x or higher and LCI-I software version 14.x and higher)* utilize nviHumEnable to control a binary output connected to a field-supplied humidification device. Enabling humidification does not force the unit to actively humidify, since humidification is activated by setpoint and space conditions *(refer to nviSpaceRH and nviSpaceHumSP.)*.

Table 25. Humidification Enable Input valid ranges

State	Value	Humidification	Meaning
0	Any value	Disabled	No humidification
1	0	Disabled	No humidification
1	1 to 255	Enabled	Humidification
0xFF (default)	Any Value	Enabled (invalid)	Unit controller decision

Master Slave Input1: nviMasterSlave1

Network Input: nviMasterSlave1 (product extension profile)

First of two inputs used by a slave unit to allow control by a master unit in a multi-unit cluster. Before a unit will become a slave, nviMasterSlave1 and nviMasterSlave2 must be bound and nvoMasterSlave1 and nvoMasterSlave2 must be unbound. Once a unit is a slave, all control data comes from the master unit and all other NVIs are ignored. However, all NVOs are still processed as usual. The default value is adopted at power-up and in the event of not receiving an update within the specified receive heartbeat time. Default service type = unacknowledged.

Note: *Clustering is currently supported only in IntelliPak Rooftop products.*

Master Slave Input2: nviMasterSlave2

Network Input: nviMasterSlave2 (product extension profile)

Second of two inputs used by a slave unit to allow control by a master unit in a multi-unit cluster. Before a unit will become a slave, nviMasterSlave1 and nviMasterSlave2 must be bound and nvoMasterSlave1 and nvoMasterSlave2 must be unbound. Once a unit is a slave, all control data comes from the master unit and all other NVIs are ignored. However, all NVOs are still processed as usual. The default value is adopted at power-up and in the event of not receiving an update within the specified receive heartbeat time. Default service type = unacknowledged.

Note: *Clustering is currently supported only in IntelliPak Rooftop products.*

Minimum Outdoor Air Flow Setpoint Input: nviMinOAFlowSP

Network Input: SNVT_flow nviMinOAFlowSP (DAC profile)

Used to set the minimum outdoor air flow rate setpoint from the network. When a valid value is present, this input has priority over any local minimum outdoor air flow setpoint. An invalid value is adopted at power-up until an update is received. Does not use the receive heartbeat function. Default service type = unacknowledged.

- Range: 0 to 28,317 liters/second
- Invalid Value: 0xFFFF = 65,535 liters/second

Outdoor Air Minimum Position Input: nviOAMinPos

Network Input: SNVT_lev_percent nviOAMinPos (SCC and DAC profile; see nviTraneVar1)

Used to set the minimum outdoor air damper position. When a valid value is present, this input has priority over any local minimum outdoor air damper position setpoint. An invalid value is adopted

at power-up until an update is received. Does not use the receive heartbeat function. Default service type = unacknowledged.

Input nviOAMinPos is overridden when nviApplicMode or nviHeatCool (SCC) is set to HVAC_MRNG_WRMUP, HVAC_NIGHT_PURGE, or HVAC_PRE_COOL. nviOAMinPos can be overridden by Trane proprietary profile extension variables.

For SCC units controlled by Tracer Summit, nviOAMinPos *(if present)* may be overridden by a Trane proprietary profile extension variable.

- Range: 0% to 100%
- Invalid Value: 0x7FFF = +163.835%

Occupancy Override Input: nviOccManCmd

Network Input: SNVT_occupancy nviOccManCmd (SCC and DAC profile)

Used to manually command the controller into different occupancy modes. This input is used in conjunction with nviOccSchedule and nviOccSensor *(if installed)* to determine the effective occupancy mode. nviOccSchedule appears in both SCC and DAC profiles, nviOccSensor in SCC profile only. The default value will be adopted at power-up and it does not use the receive heartbeat function. Should not be bound to a send heartbeat nvo. Refer to Table 118, p. 87 for more details about the utilization of nviOccManCmd. Default service type = unacknowledged.

For IntelliPak products, there is no time-out for nviOccManCmd, it will not heartbeat, and the value is not preserved when power is lost *(it is always initialized to OCC_NUL on power-up).* Input nviOccManCmd enumerations of OC_UNOCCUPIED and OC_STANDBY can be bypassed. Pressing the zone sensor module Timed Override On button (*if installed*) can change the effective occupancy from unoccupied to standby or bypass. The bypass timer is set to the value in nciBypassTime whenever nviOccManCmd equals OC_BYPASS or the local zone sensor Timed Override On request is received. After the bypass timer is set to nciBypassTime, the controller begins counting down to zero. The bypass timer is cleared to zero whenever nviOccManCmd does not equal OC_BYPASS or the local zone sensor with Timed Override Cancel request is received. If nciBypassTime is set to zero, it disables the OC_BYPASS enumeration for nviOccManCmd and nviOccSchedule. The human interface displays *Occupied TOV* when placed in bypass by a local zone senor with Timed Override On button and *Occupied* when placed in bypass by nviOccManCmd, nviOccSchedule, or nviOccSensor.

For IntelliPak products, the values 4 through 254 are manufacturer-defined to be OC_NUL.

Table 26. Occupancy Override Input valid ranges

Type	Ranges	Default
U08	0 = OC_OCCUPIED 1 = OC_UNOCCUPIED 2 = OC_BYPASS 3 = OC_STANDBY 4 to 255 = OC_NUL	255 = OC_NUL (value not available)

Occupancy Scheduler Input: nviOccSchedule

Network Input: SNVT_tod_event nviOccSchedule (SCC and DAC profile)

A structure used to command the controller into different occupancy modes on schedule. This input is used in conjunction with nviOccSensor and nviOccManCmd *(if installed)* to determine the effective occupancy mode. The input nviOccManCmd appears in both SCC and DAC profiles, nviOccSensor in SCC profile only. An invalid values is adopted at power-up and in the event of not receiving an update within the specified receive heartbeat time. Refer to Table 118, p. 87 for more details about the utilization of nviOccSchedule. Default service type = unacknowledged.

For IntelliPak products, there is no time-out for nviOccManCmd, it will not heartbeat, and the value is not preserved when power is lost *(it is always initialized to OCC_NUL on power-up).* Input nviOccManCmd enumerations of OC_UNOCCUPIED and OC_STANDBY can be bypassed. Pressing the zone sensor module Timed Override On button *(if installed)* can change the effective occupancy from unoccupied to standby or bypass. The bypass timer is set to the value in nciBypassTime whenever nviOccManCmd equals OC_BYPASS or the local zone sensor Timed Override On request is received. After the bypass timer is set to nciBypassTime, the controller begins counting down to zero. The bypass timer is cleared to zero whenever nviOccManCmd does not equal OC_BYPASS or the local zone sensor with Timed Override Cancel request is received. If nciBypassTime is set to zero, it disables the OC_BYPASS enumeration for nviOccManCmd and nviOccSchedule. The human interface displays *Occupied TOV* when placed in bypass by a local zone senor with Timed Override On button and *Occupied* when placed in bypass by nviOccManCmd, nviOccSchedule, or nviOccSensor.

Refer to"Effective Occupancy Output, nvoEffectOccup," p. 51 for more details about how unit occupancy is determined.

The input nviOccSchedule is overridden when nviApplicMode or nviHeatCool (SCC) is set to HVAC_MRNG_WRMUP, HVAC_NIGHT_PURGE, or HVAC_PRE_COOL.

For IntelliPak products, the values 4 through 254 are manufacturer-defined to be OC_NUL.

Table 27. Occupancy Override Input valid ranges

Type	Range	Description	Invalid Values	Require/Optional
U08	0 = OC_OCCUPIED 1 = OC_UNOCCUPIED 3 = OC_STANDBY 2, 4 to 255 = OC_NUL	Current State	FF = 255 = OC_NUL (value not available)	Required
U08	0 = OC_OCCUPIED 1 = OC_UNOCCUPIED 3 = OC_STANDBY 2, 4 to 255 = OC_NUL	Next State	FF = 255 = OC_NUL (value not available)	Optional

Occupancy Sensor Input: nviOccSensor

Network Input: SNVT_occupancy nviOccSensor (SCC profile)

Used to indicate the presence of occupants in the controlled space. This input is used in conjunction with nviOccSchedule and nviOccManCmd *(if installed)* to determine the effective occupancy mode. Invalid value will be adopted at power-up and in case of not receiving an update within the specified receive heartbeat time. Refer to Table 118, p. 87 for more details about the utilization of nviOccSensor. Default service type = unacknowledged.

For IntelliPak products, there is no time-out for nviOccManCmd, it will not heartbeat, and the value is not preserved when power is lost *(it is always initialized to OCC_NUL on power-up).* The nviOccManCmd enumerations of OC_UNOCCUPIED and OC_STANDBY can be bypassed. Pressing the zone sensor module Timed Override On button (*if installed*) can change the effective occupancy from unoccupied to standby or bypass. The bypass timer is set to the value in nciBypassTime whenever nviOccManCmd equals OC_BYPASS or the local zone sensor Timed Override On request is received. After the bypass timer is set to nciBypassTime, the controller begins counting down to zero. The bypass timer is cleared to zero whenever nviOccManCmd does not equal OC_BYPASS or the local zone sensor with Timed Override Cancel request is received. If nciBypassTime is set to zero, it disables the OC_BYPASS enumeration for nviOccManCmd and nviOccSchedule. The human interface displays *Occupied TOV* when placed in bypass by a local zone senor with Timed Override On button and *Occupied* when placed in bypass by nviOccManCmd, nviOccSchedule, or nviOccSensor.

Refer to "Effective Occupancy Output, nvoEffectOccup," p. 51 for more details about how unit occupancy is determined.

The input nviOccSensor is overridden when nviApplicMode or nviHeatCool (SCC) is set to HVAC_MRNG_WRMUP, HVAC_NIGHT_PURGE, or HVAC_PRE_COOL.

Table 28. Occupancy Sensor Input valid ranges

Type	Ranges	Default
U08	0 = OC_OCCUPIED 1 = OC_UNOCCUPIED 2 to 255 = OC_NUL	255 = OC_NUL (value not available)

Outdoor Air Humidity Input: nviOutdoorRH

Network Input: SNVT_lev_percent nviOutdoorRH (SCC and DAC profile)

The outdoor air humidity in percent. Typically provided by either a network sensor or a supervisory controller. When an outdoor air humidity sensor is locally wired to the controller, the nviOutdoorRH has priority if a valid value is present. An invalid value is adopted at power-up and in the event of not receiving an update within the specified receive heartbeat time. Default service type = unacknowledged.

For IntelliPak products, the outdoor air humidity input is limited to between 10 - 90%.

- Range: 10% to 90%
- Invalid Value: 0x7FFF = 163.835%

Outdoor Air Temperature Input: nviOutdoorTemp

network input SNVT_temp_p nviOutdoorTemp (SCC and DAC profile)

The outdoor air dry bulb temperature is provided by either a network outdoor air temperature sensor or another controller. When an outdoor air temperature sensor is locally wired to the controller, the nviOutdoorTemp has priority if a valid value is present. An invalid value is adopted at power-up and in the event of not receiving an update within the specified receive heartbeat time. Default service type = unacknowledged.

- Range: -39.94°C to 93.38°C (-39.9°F to 200.1°F)
- Invalid Value: 0x7FFF = 327.67°C

Primary Cool Enable Input: nviPriCoolEnable

network input SNVT_switch nviPriCoolEnable (DAC profile; refer to "Compressor Enable Input: nviComprEnable")

A structure used by a discharge air controller to enable or disable or limit mechanical cooling on the cool output. A space temp controller uses nviComprEnable. An invalid value is adopted at power-up and in the event of not receiving an update within the specified receive heartbeat time. Default service type = unacknowledged.

For all IntelliPak CSC and FAU products and older IntelliPak RT products *(LCI-I software version 13.x or lower and/or SCM software version 7.x or lower or MCM software version 14.x or lower)*, this is a binary enable/disable input. For newer IntelliPak RT products *(LCI-I software version 14.x or higher and SCM software version 8.x or higher or MCM software version 15.x or higher)*, the percent enabled is also supported. Cooling can also be locked out by setting nviApplicMode to

HVAC_FAN_ONLY *(or HVAC_MRNG_WRMUP or HVAC_NIGHT_PURGE with LCI-I software version 14.x or higher).*

Table 29. Primary Cool Enable Input valid ranges

State	Value	Equivalent Percent	Cool Output Operation
0	Any value	0.0%	Disabled
1	0	0.0%	Disabled
1	1 to 199	0.5% to 99.5%	Enabled; 1% to 100%
1	200 to 255	100.0%	Enabled; no limit
• 0xFF (invalid value) • 2 to 127 • -128 to -2	00 (invalid value)	100.0%	Enabled; no limit (invalid)

Primary Heat Enable Input: nviPriHeatEnable

Network Input: SNVT_switch nviPriHeatEnable (DAC profile; refer to "Auxiliary Heat Enable Input: nviAuxHeatEnable")

A structure used by a discharge air controller to enable or disable or limit mechanical heat on the heat output. A space temp controller uses nviAuxHeatEnable. The default value is adopted at power-up and in the event of not receiving an update within the specified receive heartbeat time. Default service type = unacknowledged.

For all IntelliPak CSC and FAU products and older IntelliPak RT products *(LCI-I software version 13.x or lower and/or HEAT software version 10.x or lower)*, this is a binary enable/disable input. For newer IntelliPak RT products *(LCI-I software version 14.x or higher and HEAT software version 11.x or higher)*, the percent enabled is also supported. Heating can also be locked out by setting nviApplicMode to HVAC_FAN_ONLY *(or HVAC_NIGHT_PURGE or HVAC_PRE_COOL with LCI-I software version 14.x or higher).*

Table 30. Primary Heat Enable Input valid ranges

State	Value	Equivalent Percent	Cool Output Operation
0	Any value	0.0%	Disabled
1	0	0.0%	Disabled
1	1 to 199	0.5% to 99.5%	Enabled; no limit
1	200 to 255	100.0%	Enabled; 1% to 100%
• 0xFF (invalid value) • 2 to 127 • -128 to -2	Any value	100.0%	Enabled; no limit (invalid)

Status Request Input: nviRequest

Network Input: SNVT_obj_request nviRequest (node profile)

Provides the mechanism to request a particular mode for a particular object within a node. An invalid value is adopted at power-up or until an update is received. Does not use the receive heartbeat function. Responses are set via nvoStatus. Default service type = unacknowledged.

Table 31. Primary Heat Enable Input valid ranges and object request field enumeration definitions

Type	Range	Description	Invalid Value	Bytes	Valid	Meaning
U16	0 to 65535	Object ID	65535	2	• 0 • 1 • 2 • 3 to 65535	• Node object • SCC object • DAC object • Invalid
U08 Enum	0 to 255	Object request	255	1	*See below*	*See below*
Length				3		

Enum	Object Request Mode	Meaning	Controller Interpretation
0	RQ_NORMAL	Enable object and remove override.	Report object status.
1	RQ_DISABLED[(a)]	Disable object.	Ignore object request, invalid request.
2	RQ_UDATE_STATUS	Just report object status.	Report object status.
3	RQ_SELF_TEST	Perform object self-test.	Ignore object request, invalid request.
4	RQ_UPDATE_ALARM	Update alarm status.	Ignore object request, invalid request.
5	RQ_REPORT_MASK	Report status bit mask.	Report status bit mask.
6	RQ_OVERRIDE	Override object.	Ignore object request, invalid request.
7	RQ_ENABLE	Enable object.	Ignore object request, invalid request.
8	RQ_RMV_OVERRIDE	Remove object override.	Ignore object request, invalid request.
9	RQ_CLEAR_STATUS	Clear object status.	Report object status.
10	RQ_CLEAR_ALARM	Clear object alarm.	Ignore object request, invalid request.
11	RQ_ALARM_NOTIFY_ENABLE	Enable alarm notification.	Ignore object request, invalid request.
12	RQ_ALARM_NOTIFY_DISABLE	Disable alarm notification.	Ignore object request, invalid request.
13	RQ_MANUAL_CTRL	Enable object for manual control.	Ignore object request, invalid request.
14	RQ_REMOTE_CTRL	Enable object for remote control.	Ignore object request, invalid request.
15	RQ_PROGRAM	Enable programming of special configuration properties.	Ignore object request, invalid request.
16	RQ_CLEAR_RESET	Clear reset notification flag.	Ignore object request, invalid request.
17	RQ_RESET	Execute reset sequence of object.	Ignore object request, invalid request.
18 to 255	RQ_NUL	Value not available.	Ignore object request, invalid request.

(a) Highlighted entries under **Object Request Mode** column **are not** supported by the controller. Instead, these entries will generate an **nvoStatus** transmission with the **Invalid_Request** bit set.

Table 32. Node object behavior in response to object request

Request Code	Node Object Behavior
Normal	The Request does not change the state of the object. The Status of the object is sent via nvoStatus. See nciApplication for a description of how to determine the unit type and which profile is supported.
Update status	Status of the node object is sent via nvoStatus. The status bits of the node object (with the exception of invalid_request and invalid_id) are defined to be the inclusive OR of the status bits of all the other objects in the node, SCC and DAC in this case.
Report mask	Send a mask of supported status bits via nvoStatus. A one bit in the mask means that the node may set the corresponding bit in nvoStatus when the condition defined for that bit occurs. A zero means that the bit will never be set by the node.
Clear status	No status bits cleared. Status of the object is sent via nvoStatus.

Table 32. Node object behavior in response to object request (continued)

Request Code	Node Object Behavior
Clear alarm	Clears most latching diagnostics. Re-sends automatically resetting diagnostics if no latching diagnostics are present.
NUL	Ignore object request.

Table 33. SCC/DAC object behavior in response to object request

Request Code	Node Object Behavior
Normal	The Request does not change the state of the object. The Status of the object is sent via nvoStatus. The out-of-service object sets the out-of-service and disabled bits. See nciApplication for a description of how to determine the unit type and which profile is supported.
Update status	Status of the object is sent via nvoStatus. The out-of-service object sets the out-of-service and disabled bits.
Report mask	Send a mask of supported status bits via nvoStatus. A one bit in the mask means that the node may set the corresponding bit in nvoStatus when the condition defined for that bit occurs. A zero means that the bit will never be set by the node. The out-of-service object sets the out-of-service and disabled bits.
Clear status	No status cleared. Status of the object is sent via nvoStatus. The out-of-service object sets the out-of-service and disabled bits.
Clear alarm	Clears most latching diagnostics. Re-sends automatically resetting diagnostics if no latching diagnostics are present.
NUL	Ignore object request.

Temperature Setpoint Input (Absolute): nviSetpoint

Network Input: SNVT_temp_p nviSetpoint (SCC profile)

Used to allow the space setpoints for the occupied and standby modes to be changed. If nviSetpoint, nviSetptOffSet and/or nviSetptShift are used together, the result on the effective setpoints is additive. The default value is adopted at power-up until an update is received. Does not use the receive heartbeat function. Default service type = unacknowledged.

Refer to Table 125, p. 107 for more details about the utilization of nviSetpoint by IntelliPak products.

- Range: 10°C to 35°C (50°F to 95°F)
- Default: 0x7FFF = 327.67°C
- Invalid Value: 0x7FFF = 327.67°C

Setpoint Offset Input: nviSetptOffset

Network Input: SNVT_temp_p nviSetptOffset (SCC profile)

Used to shift the effective occupied and standby temperature setpoints. All occupied and standby setpoints will be shifted upward (+) or downward (-) by the value of nviSetptOffset. If nviSetpoint, nviSetptOffSet, and/or nviSetptShift are used together, the result on the effective setpoints is additive.

An invalid value is adopted at power-up and in the event of not receiving an update within the specified receive heartbeat time. Default service type = unacknowledged.

Refer to Table 125, p. 107 for more details about the utilization of nviSetptOffset by IntelliPak products.

- Range: -10°C to +10°C (-18°F to 18°F)
- Invalid Value: 0x7FFF = 327.67°C

Setpoint Shift Input: nviSetptShift

Network Input: SNVT_temp_setpt nviSetptShift (SCC profile)

A structure used to shift the effective occupied, standby, and unoccupied setpoints upward (+) or downward (-) by the corresponding value of nviSetptShift. If nviSetpoint, nviSetptOffSet, and/or nviSetptShift are used together, the result on the effective setpoints is additive.

An invalid value is adopted at power-up and in the event of not receiving an update within the specified receive heartbeat time. Default service type = unacknowledged.

Refer to Table 125, p. 107 for more details about the utilization of nviSetptShift by IntelliPak products.

Table 34. Structure definition

Type	Description	Range	Invalid Value
SNVT_temp_p	Occupied_cool	-10°C to 10°C (-18°F to 18°F)	0x7FFF = +327.67°C
SNVT_temp_p	Standby_cool	-10°C to 10°C (-18°F to 18°F)	0x7FFF = +327.67°C
SNVT_temp_p	Unoccupied_cool	-10°C to 10°C (-18°F to 18°F)	0x7FFF = +327.67°C
SNVT_temp_p	Occupied_heat	-10°C to 10°C (-18°F to 18°F)	0x7FFF = +327.67°C
SNVT_temp_p	Standby_heat	-10°C to 10°C (-18°F to 18°F)	0x7FFF = +327.67°C
SNVT_temp_p	Unoccupied_heat	-10°C to 10°C (-18°F to 18°F)	0x7FFF = +327.67°C

Space CO_2 Sensor Input: nviSpaceCO_2 (nviSpaceIAQ)

Network Input: SNVT_ppm nviSpaceCO_2 (SCC and DACX profile)

Used to measure the space CO_2 in PPM. The unit can also have a locally wired CO_2 sensor. When a local space CO_2 value is available to the controller, the nviSpaceCO_2 has priority, if a valid value is present. The default value is adopted at power-up and in the event of not receiving an update within the specified receive heartbeat time. Default service type = unacknowledged.

- Range: 50 to 2,200 PPM
- Default: 0xFFFF = 65,535 PPM
- Invalid Value: 0xFFFF = 65,535 PPM

Space Dehumidification Setpoint Input: nviSpaceDehumSP

Network Input: SNVT_lev_percent nviSpaceDehumSP (SCCX and DAC profile)

Used to connect a network space dehumidification setpoint or network output from another controller. When a local space dehumidification setpoint is available to the controller, the nviSpaceDehumSP has priority if a valid value is present. An invalid value is adopted at power-up until an update is received. Does not use the receive heartbeat function. Default service type = unacknowledged.

Only IntelliPak Rooftop products with the dehumidification option utilize nviSpaceDehumSP, which is mapped to both the Occupied and Unoccupied Dehumidification Setpoints.

- 40% to 65% (RT) / 0x7FFF = 163.835%

Space Humidification Setpoint Input: nviSpaceHumSP

Network Input: SNVT_lev_percent nviSpaceHumSP (SCCX and DAC profile)

Used to connect a network space humidity setpoint or network output from another controller. When a local space humidity setpoint is available to the controller, the nviSpaceHumSP has priority if a valid value is present. The default value is adopted at power-up until an update is received. Does not use the receive heartbeat function. Default service type = unacknowledged.

Only IntelliPak RT products *(RTM software version 24.x or higher and LCI-I software version 14.x and higher)* utilize nviSpaceHumSP, which is mapped to both the Occupied and Unoccupied Humidification Setpoints, to control a binary output connected to a field-supplied humidification device *(also refer to nviHumEnable and nviSpaceRH)*.

- Range: 20% to 50%
- Default: 0x7FFF = 163.835%
- Invalid Value: 0x7FFF = 163.835%

Space Humidity Input: nviSpaceRH

Network Input: SNVT_lev_percent nviSpaceRH (SCC and DAC profile)

Used to connect a network return air or space relative humidity sensor or network output from another controller. When a return air or space relative humidity sensor is locally wired to the controller, the nviSpaceRH has priority, if a valid value is present. An invalid value is adopted at power-up and in the event of not receiving an update within the specified receive heartbeat time. Default service type = unacknowledged.

- Range: 10% to 90% RT
- Default: 0x7FFF = 163.835%
- Invalid Value: 0x7FFF = 163.835%

Space Temperature Input: nviSpaceTemp

Network Input: SNVT_temp_p nviSpaceTemp (SCC and DAC profile)

Used to connect a network space temperature sensor or network output from another controller. If nviSpaceTemp has a valid value, it will have priority over a locally wired space temperature sensor. An invalid value is adopted at power-up and in the event of not receiving an update within the specified receive heartbeat time. Default service type = unacknowledged.

For IntelliPak products, nviSpaceTemp is utilized for occupied and unoccupied zone control, as well as morning warm up and daytime warm- up. In addition, it is also used for Dehumidification Override Zone Temperature *(critical zone)* on IntelliPak Rooftop DAC products.

- Range: -39.94°C to 93.38°C (-39.9°F to 200.1°F)
- Invalid Value: 0x7FFF = 327.67°C

Network Variable Output Definitions

The network variable output definitions in this section are listed alphabetically by the nvoName. For example nvoAlarmMessage.

Alarm Message Text Output: nvoAlarmMessage

Network Output: SNVT_str_asc nvoAlarmMessage (node extension profile) [Refer to Table 35, p. 40 for nvoAlarmMessage diagnostic summary]

Used to communicate the diagnostics in the controller as they occur. The alarm message code format is displayed as, ***s_nnnnnnnnnnnnnnnnnnnnnnnnnnnnnn***, with a Space between the ***s*** and the ***first ASCII character***. The following explains this alarm message coding:

- s; indicates diagnostic severity with five types of diagnostics:
  - P= normal, last reset resulted from a power up
  - 0= normal, last reset was not from power up
  - 1= informational message (handle at next scheduled routine maintenance)
  - 2= service required (handle at normal rates during normal working hours)
  - 3= critical alarm (handle now, cost is no object)
- n; represents 29 ASCII characters that displays a deciphered message. The last ***n*** must be null (**0x00**), can be 29 characters or less.

For IntelliPak products, the language selected for transmitting nvoAlarmMessage may be different than the language selected for the human interface(s).

Note: *Some messages transmitted by nvoAlarmMessage are not displayed as diagnostics at the human interface(s). They were included for remote indication as to why a unit was not cooling or not running:*

- *Invalid Unit Configuration (indicated at top-level status screen)*
- *Maintenance Required (Trane Summit only, Trane proprietary)*
- *Unit Communications Failure (LCI has lost communications with the RTM)*
- *Unit Stopped at Local HI (indicated at top-level status screen)*
- *Unit Stopped at Remote HI (indicated at top-level status screen)*
- *RTM External Stop (indicated at top-level status screen)*

Related information during message transmission:

- *When Transmitted: significant change*
- *Update Rate: no faster than configured minimum send time*
- *Default Service Type: unacknowledged*

Table 35. IntelliPak LCI-I nvoAlarmMessage diagnostic summary

IPC Index #	NvoAlarmMessage Text (English)	NvoAlarmMessage Text (Español)	NvoAlarmMessage Text (Français)	Trane Alarm Level	Config nci Device Config	Description	Set Alarm, novStatus, nvoUnit Status	IPC Packet Byte, Bit
	Normal	Normal	Normal	P	No	*P Normal* is required to be transmitted upon power up and before any current/active alarms to notify Tracer Summit that controller has power up reset all control data.	No	N/A
	Normal	Normal	Normal	0	No	No diagnostics present, no diagnostic bits set.	No	N/A
1	RTM Zone Temp Sensor Failure	Fallo sensor temp zona RTM	Defaut capt RTM temp zone	2	Yes	Auto	Yes	[0:6:0:7]
2	Supply Air Temp Sensor Fail	Fallo sensor temp air sum	Defaut capt temp air souffle	2	Yes	Auto	Yes	[0:6:0:6]
3	If unit type = RT or CSC (RTM Aux Temp Sensor Failure)	Fallo sensor temp aux RTM	Fallo sensor temp secado	Default capt temp auxil. RTM	Default capt temp sechage RTM	2	Yes	Auto
4	OA Temperature Sensor Fail	Fallo sensor temp AE	Defaut capt temp AE	2	Yes	Auto	Yes	[0:6:0:4]
5	Mode Input Failure	Fallo entrada modo	Defaut mode entree	1	No	Auto	Yes	[0:6:0:3]
6	Occ Zone Cool Setpoint Fail	Fallo ajuste enfr zona ocup	Defaut pt regl refr zone occ	2	Yes	Auto	Yes	[0:6:0:2]
7	Occ Zone Heat Setpoint Fail	Fallo ajuste calef zona ocup	Defaut pt regl chal zone occ	2	Yes	Auto	Yes	[0:6:0:1]
8	Supply Air Press Sensor Fail	Fallo sensor presion air sum	Defaut capt press air alim	2	Yes	Auto	Yes	[0:6:0:0]
9	OA Humidity Sensor Failure	Fallo sensor humedad AE	Defaut capt humidite AE	2	Yes	Auto	Yes	[0:6:1:7]
10	Emergency Stop	Parada emergencia	Arret d'urgence	2	Yes	Manual	Yes	[0:6:1:6]
11	Supply Fan Failure	Fallo vent sum	Defaut vent soufflage	2	Yes	Manual	Yes	[0:6:1:5]
12	Exhaust/Return Fan Failure	Fallo vent descarga/regreso	Defaut vent extraction/ retour	2	Yes	Manual	Yes	[0:6:1:4]
13	Lvg Evap Temp Sensor - Ckt1	Sensor temp evap lvg-Cto 1	Capt temp evap lvg-Crt 1	2	Yes	Auto	Yes	[0:6:1:3]
14	Lvg Evap Temp Sensor - Ckt2	Sensor temp evap lvg-Cto 2	Capt temp evap lvg-Crt 2	2	Yes	Auto	Yes	[0:6:1:2]
15	Low Pressure Ctl Open - Ckt1	Ctrl pres baja abierto-Cto 1	Ctrl basse press ouvert-Crt1	2	Yes	Manual	Yes	[0:6:1:1]
16	Low Pressure Ctl Open - Ckt2	Ctrl pres baja abierto-Cto 2	Ctrl basse press ouvert-Crt2	2	Yes	Manual	Yes	[0:6:1:0]
17	Condenser Temp Sensor - Ckt1	Fallo sensor temp cond-Cto 1	Defaut capt temp cond-Crt 1	2	Yes	Auto	Yes	[0:6:2:7]
18	Condenser Temp Sensor - Ckt2	Fallo sensor temp cond-Cto 2	Defaut capt temp cond-Crt 2	2	Yes	Auto	Yes	[0:6:2:6]
19	Compressor Trip - Ckt1	Desconex comp - Cto 1	Disjonct compresseur - Crt 1	2	Yes	Manual	Yes	[0:6:2:5]
20	Compressor Trip - Ckt2	Desconex comp - Cto 2	Disjonct compresseur - Crt 2	2	Yes	Manual	Yes	[0:6:2:4]
21	HEAT Aux Temp Sensor Fail	Fallo sensor temp aux calef	Defaut capt temp auxil chaud	2	No	Auto	Yes	[0:6:2:3]
22	Low Air Temp Limit Trip	Desc lim inf temp aire	Decl limit inf temp air	2	Yes	Manual	Yes	[0:6:2:2]
23	Heat Failure	Fallo calor	Defaut chauffage	1	No	info	Yes	[0:6:2:1]

Table 35. IntelliPak LCI-I nvoAlarmMessage diagnostic summary (continued)

IPC Index #	NvoAlarmMessage Text (English)	NvoAlarmMessage Text (Español)	NvoAlarmMessage Text (Français)	Trane Alarm Level	Config nci Device Config	Description	Set Alarm, novStatus, nvoUnit Status	IPC Packet Byte, Bit
24	Unocc Zone Cool Stpnt Fail	Fallo ajuste enfr zona desoc	Panne pt cons refr zone inoc	2	No	Auto	Yes	[0:6:2:0]
25	Unocc Zone Heat Stpnt Fail	Fallo ajuste cale zona desoc	Panne pt cons chal zone inoc	2	No	Auto	Yes	[0:6:3:7]
26	SA Duct Press Setpoint Fail	Fallo ajuste presion air sum	Panne pt cons press air alim	2	Yes	Auto	Yes	[0:6:3:6]
27	Space Pressure Setpoint Fail	Fallo ajuste presion espacio	Defaut pt cons press inter	2	No	Auto	Yes	[0:6:3:5]
28	Space Pressure Sensor Fail	Fallo sensor presion espacio	Defaut capt press inter	2	No	Auto	Yes	[0:6:3:4]
29	Return Air Temp Sensor Fail	Fallo sensor temp air retorn	Defaut capt temp air retour	2	Yes	Auto	Yes	[0:6:3:3]
30	If unit type = RT or CSC (Return Air RH Sensor Failure)	Fallo sensor hum air retorno Fallo sensor humedad zona	Defaut capt humidite RA Defaut capt humidite zone	2	Yes	Auto	Yes	[0:6:3:2]
31	Auto - SA High Press Limit	Auto - limite pres est AS	Lim press stat AA reencl aut	2	Yes	Manual	Yes	[0:6:3:1]
32	Man - SA High Press Limit	Man - limite pres est AS	Lim press stat AA reencl man	2	Yes	Auto	Yes	[0:6:3:0]
33	SCM Communications Failure	Fallo comunicaciones SCM	Defaut communications SCM	2	Yes	Auto	Yes	[0:6:4:7]
34	MCM Communications Failure	Fallo comunicaciones MCM	Defaut communications MCM	2	Yes	Auto	Yes	[0:6:4:6]
35	HEAT Communications Failure	Fallo cominic modulo calef	Defaut communic mod chaud	2	Yes	Auto	Yes	[0:6:4:5]
36	ECEM Communications Failure	Fallo comunicaciones ECEM	Defaut communic ECEM	2	Yes	Auto	Yes	[0:6:4:4]
37	GBAS 0-5 VDC Comm Failure	Fallo com mod GBAS 0-5 VCC	Defaut comm mod GBAS 0-5 VCC	1	No	Auto	Yes	[0:6:4:3]
38	Lontalk I/F Module Comm Fail	Fallo com modulo LCI-I	LCI-I Echec Comm Module	2	Yes	This bit is set by the RTM when the RTM detects an IPC failure. The IPC failure might be intermittent. The LCI will transmit nvoAlarmMessage if this bit is set. (*Auto*)	Yes	[0:6:4:2]
39	BAS/Network Comm Fail	Fallo com BAS/Red	BAS/Reseau Echec Comm	2	Yes	The LCI sets TCI packet 2 byte 17 bit 0 and clears TCI packet 2 byte 17 bit 2 when all Comm5 failure criteria have been met. RTM then sets this bit. (*Auto*)	Yes	[0:6:4:1]
40	NSB Panel Communication Fail	Fallo com panel NSB	Defaut comm coffret NSB	1	No	Auto	Yes	[0:6:4:0]
41	RTM EEPROM Failure	Error almac datos modulo RTM	Defaut EEPROM RTM	1	No	Info	Yes	[0:6:5:7]
42	Unit HI Communications Fail	Fallo com unidad HI	Defaut comm avec unite IH	1	No	Auto	Yes	[0:6:5:6]
43	VOM Communications Failure	Fallo comunicaciones VOM	Defaut communic VOM	2	No	Auto	Yes	[0:6:5:5]
44	Compressor Contact Fail-Ckt1	Fallo contactor comp - Cto 1	Defaut contacteur comp-Crt 1	2	Yes	Manual	Yes	[0:6:5:4]

Table 35. IntelliPak LCI-I nvoAlarmMessage diagnostic summary (continued)

IPC Index #	NvoAlarmMessage Text (English)	NvoAlarmMessage Text (Español)	NvoAlarmMessage Text (Français)	Trane Alarm Level	Config nci Device Config	Description	Set Alarm, novStatus, nvoUnit Status	IPC Packet Byte, Bit
45	Compressor Contact Fail-Ckt2	Fallo contactor comp - Cto 2	Defaut contacteur comp-Crt 2	2	Yes	Manual	Yes	[0:6:5:3]
46	SA Temp Cool Setpoint Fail	Fallo ajuste enfr temp AS	Defaut pt regl refr air alim	2	Yes	Auto	Yes	[0:6:5:2]
47	SA Temp Heat Setpoint Fail	Fallo ajuste cale temp AS	Defaut pt regl chal air alim	2	Yes	Auto	Yes	[0:6:5:1]
48	Dirty Filter	Filtro sucio	Filtre sale	1	No	Info	no	[0:6:5:0]
49	NSB Zone Temp Sensor Fail	Fallo sensor temp zona NSB	Defaut capt temp zone NSB	1	No	Auto	Yes	[0:6:6:7]
50	VOM Mode A Active	Ventilacion anulacion Modo A	Annulation vent mode A	1	No	Info	Yes	[0:6:6:6]
51	VOM Mode B Active	Ventilacion anulacion Modo B	Annulation vent mode B	1	No	Info	Yes	[0:6:6:5]
52	VOM Mode C Active	Ventilacion anulacion Modo C	Annulation vent mode C	1	No	Info	Yes	[0:6:6:4]
53	VOM Mode D Active	Ventilacion anulacion Modo D	Annulation vent mode D	1	No	Info	Yes	[0:6:6:3]
54	VOM Mode E Active	Ventilacion anulacion Modo E	Annulation vent mode E	1	No	Info	Yes	[0:6:6:2]
55	CO2 Sensor Failure	Fallo sensor CO2	Defaut capteur CO2	2	Yes	Auto	Yes	[0:6:6:1]
56				N/A	No	No message-internal flag.	No	[0:6:6:0]
57	VCM Aux Temp Sensor Failure	Fallo sensor aux temp VCM	Defaut capt temp aux VCM	1	No	Auto	Yes	[0:6:7:7]
58	Blocked Air Return	Aire retorno bloqueado	Retour air bloque	1	No	Manual	Yes	[0:6:7:6]
59	• If RT1 or CSC (Velocity Press Sensor Fail) • If RT2: Vel Press Sensor (Rear) Fail	Fallo sensor pres velocidad Fallo sensor (trasero) veloci	Defaut capt press vitesse Defaut capt (arrière) vitesse	2	No	Auto	Yes	[0:6:7:5]
60	VCM Communications Failure	Fallo comunicaciones VCM	Defaut communications VCM	2	No	Auto	Yes	[0:6:7:4]
61	WSM Communications Failure	Fallo comunicaciones WSM	Defaut communications WSM	2	Yes	Auto	Yes	[0:6:7:3]
62	Compressor Trip - Ckt 3	Desconex comp - Cto 3	Disjonct compresseur - Crt 3	2	Yes	Auto	Yes	[0:6:7:2]
63	Compressor Trip - Ckt 4	Desconex comp - Cto 4	Disjonct compresseur - Crt 4	2	Yes	Auto	Yes	[0:6:7:1]
64	Exh Fan VFD Bypass Enabled	Deriv AFV vent descar activa	Derv EVF vent extrac active	1	No	Auto	Yes	[0:6:7:0]
65	Cond Temp Sensor Fail - Ckt3	Fallo sensor temp cond-Cto 3	Defaut capt temp cond-Crt 3	2	Yes	Auto	Yes	[0:27:8:7]
66	Cond Temp Sensor Fail - Ckt4	Fallo sensor temp cond-Cto 4	Defaut capt temp cond-Crt 4	2	Yes	Auto	Yes	[0:27:8:6]
67	Ent Cond Wtr Tmp Sensor Fail	Fallo sensor agua cond ent	Panne capt temp eau cond ent	2	Yes	Auto	Yes	[0:27:8:5]
68	WSM MA Temp Sensor Failure	Fallo sensor temp air mezcla	Defaut capt temp air mel WSM	2	No	Auto	Yes	[0:27:8:4]
69	Enter Water Temp Sensor Fail	Fallo sensor temp agua ent	Defaut capt temp eau entree	2	Yes	Auto	Yes	[0:27:8:3]
70	Water Flow Failure	Fallo flujo agua	Defaut deb eau	2	No	Auto	Yes	[0:27:8:2]
71	Supply Fan VFD Bypass Enable	Deriv AFV vent sum activa	Derv EVF vent alim active	1	No	Auto	Yes	[0:27:8:1]
72	High CO_2 Level	Nivel CO_2 alto	Niv CO_2 eleve	2	Yes	Auto	Yes	[0:27:8:0]
73	Low Pressure Ctl Open - Ckt4	Ctrl presion baja abi-Cto 4	Ctrl basse press ouvert-Crt4	2	Yes	Auto	Yes	[0:27:9:7]
74	Low Pressure Ctl Open - Ckt3	Ctrl presion baja abi-Cto 3	Ctrl basse press ouvert-Crt3	2	Yes	Auto	Yes	[0:27:9:6]

Table 35. IntelliPak LCI-I nvoAlarmMessage diagnostic summary (continued)

IPC Index #	NvoAlarmMessage Text (English)	NvoAlarmMessage Text (Español)	NvoAlarmMessage Text (Français)	Trane Alarm Level	Config nci Device Config	Description	Set Alarm, novStatus, nvoUnit Status	IPC Packet Byte, Bit
75	Compressor Contact Fail-Ckt4	Fallo contactor comp - Cto 4	Defaut contacteur comp-Crt 4	2	Yes	Manual	Yes	[0:27:9:5]
76	Compressor Contact Fail-Ckt3	Fallo contactor comp - Cto 3	Defaut contacteur comp-Crt 3	2	Yes	Manual	Yes	[0:27:9:4]
77	Evap Temp Sensor Fail - Ckt4	Fallo sensor temp evap-Cto4	Defaut capt temp evap-Crt 4	2	Yes	Auto	Yes	[0:27:9:3]
78	Evap Temp Sensor Fail - Ckt3	Fallo sensor temp evap-Cto3	Defaut capt temp evap-Crt 3	2	Yes	Auto	Yes	[0:27:9:2]
79	Cond Press Sensor Fail-Ckt 2	Fallo sensor pren cond-Cto 2	Defaut capt press cond-Crt 2	2	Yes	Auto	Yes	[0:27:9:1]
80	Cond Press Sensor Fail-Ckt 1	Fallo sensor pren cond-Cto 1	Defaut capt press cond-Crt 1	2	Yes	Auto	Yes	[0:27:9:0]
81	RTM Zone Humidity Sensor Fail	Fallo sensor hum zona RTM	Defaut capt RTM hum zone	2	Yes	Auto	Yes	[0:27:10:7]
82	Ent Evap Temp Sensor -Ckt1	Sensor temp evap ent-Cto 1	Capt temp evap ent-Crt 1	2	Yes	Auto	Yes	[0:27:10:6]
83	Ent Evap Temp Sensor -Ckt2	Sensor temp evap ent-Cto 2	Capt temp evap ent-Crt 2	2	Yes	Auto	Yes	[0:27:10:5]
84	Ent Evap Temp Sensor -Ckt3	Sensor temp evap ent-Cto 3	Capt temp evap ent-Crt 3	2	Yes	Auto	Yes	[0:27:10:4]
85	Ent Evap Tmp Sensor -Ckt4	Sensor temp evap ent-Cto 4	Capt temp evap ent-Crt 4	2	Yes	Auto	Yes	[0:27:10:3]
86	Morning Warmup Setpoint Fail	Fallo ajuste manana calienta	Defaut pt regl MWU	2	Yes	Auto	Yes	[0:27:10:2]
87	Min Position Setpoint Fail	Fallo ajuste posicion minima	Defaut pt regl min position	2	Yes	Auto	Yes	[0:27:10:1]
88	Econ Drybulb Setpoint Fail	Fallo ajuste econ drybulb	Defaut pt regl econ drybulb	2	Yes	Auto	Yes	[0:27:10:0]
89	Min OA Flow Setpoint Fail	Fallo ajuste flujo min OA	Defaut pt regl flux min OA	2	Yes	Auto	Yes	[0:28:8:7]
90	Recovery Lvg Exh Sensor Fail	Fallo sensor recuper lvg exh	Default capt retablis lvg exh	2	Yes	Auto	Yes	[0:28:8:6]
91	Energy Recovery Wheel Fail	Fallo rueda recuper energía	Defaut retablis d'energie	2	Yes	Auto	Yes	[0:28:8:5]
92	Cond Sump Level Fail	Fallo sumid cond nivel	Defaut sump niveau	2	Yes	Auto	Yes	[0:28:8:4]
93	Cond Sump Min Level Fail	Fallo sumid cond nivel min	Defaut sump niveau min	2	Yes	Auto	Yes	[0:28:8:3]
94	Cond Water Pump Fail (man)	Fallo bomba agua cond (man)	Default pompe cond eau (man)	2	Yes	Auto	Yes	[0:28:8:2]
95	Cond Water Pump Fail (Auto)	Fallo bomba agua cond (Auto)	Default pompe cond eau (Auto)	2	Yes	Auto	Yes	[0:28:8:1]
96	Cond Water Temp Sensor Fail	Fallo sensor temp agua cond	Default capt temp cond eau	2	Yes	Auto	Yes	[0:28:8:0]
97	Reheat Sat Cond Temp Sensor	Fallo sensor tmp cond rechauf	Defaut capt temp cond recal	2	Yes	Auto	Yes	[0:28:9:7]
99	GBAS 0-10 VDC Comm Failure	Fallo com mod GBAS 0-10 VCC	Defaut comm mod GBAS 0-10 VCC	1	No	Auto	Yes	[0:28:9:5]
100	If RT or RT2 (Reheat Head Press High Limit)	Fallo pto fjcion secdo AS Recal prensa límite alto	Defaut val sechage AA Rechauf presse haute limite	2	Yes	Auto	Yes	[0:28:9:4]
101	Improper Airflow for Dehumid	Corriente aire impropia dehum	Flux air déplacé dehumid	2	Yes	Manual	Yes	[0:28:9:3]
102	SA Reheat Setpoint Failure	Fallo pto fjcion reclnt AS	Defaut val rechauf AA	2	Yes	Auto	Yes	[0:28:9:2]

Table 35. IntelliPak LCI-I nvoAlarmMessage diagnostic summary (continued)

IPC Index #	NvoAlarmMessage Text (English)	NvoAlarmMessage Text (Español)	NvoAlarmMessage Text (Français)	Trane Alarm Level	Config nci Device Config	Description	Set Alarm, novStatus, nvoUnit Status	IPC Packet Byte, Bit
103	Unocc Dehum Setpoint Fail	Fallo pto fjcion dehum dsoc	Defaut val dehum inocc	2	Yes	Auto	Yes	[0:28:9:1]
104	Occ Dehum Setpoint Failure	Fallo pto fjcion dehum ocp	Defaut val dehum occup	2	Yes	Auto	Yes	[0:28:9:0]
105	Unocc Humid Setpoint Fail	Fallo pto fjcion humid dsoc	Defaut val humid inocc	2	Yes	Auto	Yes	[0:28:10:7]
106	Occ Humid Setpoint Fail	Fallo pto fjcion humid ocp	Defaut val humid occup	2	Yes	Auto	Yes	[0:28:10:6]
107	MDM Communications Failure	Fallo comunicaciones MDM	Defaut communications MDM	2	Yes	Auto	Yes	[0:28:10:5]
109	Dirty Final Filter	Filtro final sucio	Filtre final sale	1	No	Info	No	[0:28:10:3]
110	Dirty Recovery Prefilter	Filtro recuperacion sucio	Filtre retablissement sale	1	No	Info	No	[0:28:10:2]
112	Vel Press Sensor (Front) Fail	Sensor pres (frente) vel	Capt press (devant) vel	2	Yes	Auto	Yes	[0:28:10:0]
113	High Superheat - Ckt 1	Sobrecalente alto - Cto 1	Haute surchauffe - Crt 1	2	Yes	Info	Yes	[0:29:8:7]
114	Low Refrigerant Charge Ckt 1	Carga refrigerante baja Cto 1	Charge basse refrig Crt 1	2	Yes	Manual	Yes	[0:29:8:6]
115	High Superheat - Ckt 2	Sobrecalente alto - Cto 2	Haute surchauffe - Crt 2	2	Yes	Info	Yes	[0:29:8:5]
116	Low Refrigerant Charge Ckt 2	Carga refrigerante baja Cto 2	Charge basse refrig Crt 2	2	Yes	Manual	Yes	[0:29:8:4]
117	High Superheat - Ckt 3	Sobrecalente alto - Cto 3	Haute surchauffe - Crt 3	2	Yes	Info	Yes	[0:29:8:3]
118	Low Refrigerant Charge Ckt 3	Carga refrigerante baja Cto 3	Charge basse refrig Crt 3	2	Yes	Manual	Yes	[0:29:8:2]
119	High Superheat - Ckt 4	Sobrecalente alto - Cto 4	Haute surchauffe - Crt 4	2	Yes	Info	Yes	[0:29:8:1]
120	Low Refrigerant Charge Ckt 4	Carga refrigerante baja Cto 4	Charge basse refrig Crt 4	2	Yes	Manual	Yes	[0:29:8:0]
122	MPM Communications Failure	Fallo comunicaciones MPM	Defaut communications MPM	2	Yes	Auto	Yes	[0:29:9:6]
123	TPM Communications Failure	Fallo comunicaciones TPM	Defaut communications TPM	2	Yes	Auto	Yes	[0:29:9:5]
124	Return Plenum Press Sensor	Fallo sensor presion regreso	Defaut capt press retour	2	Yes	Auto	Yes	[0:29:9:4]
125	Ret Press High Limit (Man)	Vuelva prensa límite alto man	Ret presse haute limite man	2	Yes	Manual	Yes	[0:29:9:3]
126	Ret Press High Limit (Auto)	Vuelva prensa límite alto Auto	Ret presse haute limite Auto	2	Yes	Auto	Yes	[0:29:9:2]
245	Invalid Unit Configuration	Config Invalida de la Unidad	Config d'unite invalide	1	No	If Unit_State [0:18:2] = 1 = check config.	Yes	[0:18:2]
246	Maintenance Required	La conservacion Requirio	Maintenance exigee	1	No	Generated by the LCI. (Refer to the *Fan Run Hours* section of *nvoTraneVar7* and *nciPersonality2* for a complete description of this function.	No	N/A

Table 35. IntelliPak LCI-I nvoAlarmMessage diagnostic summary (continued)

IPC Index #	NvoAlarmMessage Text (English)	NvoAlarmMessage Text (Español)	NvoAlarmMessage Text (Français)	Trane Alarm Level	Config nci Device Config	Description	Set Alarm, novStatus, nvoUnit Status	IPC Packet Byte, Bit
247	Unit Communications Failure	Fallo comunicaciones unidad	Defaut communic avec unite	2	Yes	• Generated by the LCI. This is IPC failure as detected by the LCI. • *Only* generated after having good IPC comm. This message will be sent if the LCI does not receive any RTM tokens for 3 minutes. • The green status LED will flash, 0.25 sec ON, 2.00 sec OFF. This is the initial state of the green status LED.	Yes	N/A
253	Unit Stopped at Local HI	La unidad detuvo a local HI	Arret unite a local HI	1	No	Transmitted whenever the Local_HI_Command_Byte in the RTM is equal to 1 (*Stop*).	No	[0:6:18:0]
254	Unit Stopped at Remote HI	La unidad detuvo a remoto HI	Arret unite a distance HI	1	No	Transmitted whenever the Remote_HI_Command_Byte in the RTM is equal to 1 (*Stop*).	No	[0:6:19:0]
255	RTM External Stop	Parada externa RTM	Arret externe RTM	1	No	Transmitted whenever the External_Stop_Command bit in the RTM is set.	No	[0:17:18:7]

Application Mode Output: nvoApplicMode

Network Output: SNVT_hvac_mode nvoApplicMode (DAC profile)

Used to control the mode of other controllers, such as a VAV box controller. Will typically send a value of HVAC_AUTO except in certain modes where an override of other controllers is required.

IntelliPak FAU products report HVAC_COOL when dehumidifying. IntelliPak DAC Rooftop products require full airflow during dehumidification and therefore report HVAC_MAX_HEAT, to drive VAV boxes wide open, instead of HVAC_DEHUMIDIFICATION. (Refer to Table 125, p. 107 in determining nvoApplicMode.

Table 36. Application Mode Output

Range	Meaning	When Transmitted	Update Rate	Default Service Type
0 = HVAC_AUTO	Fully automatic	Significant change or heartbeat.	No faster than config minimum send time send heartbeat time.	Unacknowledged.
1 = HVAC_HEAT	Heating *only*			
2 = HVAC_MRNG_WRMUP	Morning warm-up			
3 = HVAC_COOL	Cooling *only*			
4 = HVAC_NIGHT_PURGE	Free cooling			
5 = HVAC_PRE_COOL	Morning cool-down			
6 = HVAC_OFF	No operation allowed			
7 = HVAC_TEST	Special test mode, manufacturer defined			
8 = HVAC_EMERG_HEAT[(a)]				
9 = HVAC_FAN_ONLY	No heat/cool functions Operate			
10 = HVAC_FREE_COOL[(a)]				
11 = HVAC_ICE[(a)]				
12 = HVAC_MAX_HEAT	Maximum flow heating			
13 = HVAC_ECONOMY[(a)]				
14 = HVAC_DEHUMIDIFICATION[(a)]				
15 = HVAC_CALIBRATE[(a)]				
255 = HVAC_NUL	Invalid			

(a) Enumeration not sent by the controller.

Building Static Pressure Output: nvoBldgStatPress

Network Output: SNVT_press_p nvoBldgStatPress (SCCX and DAC profile)

Used for monitoring the current value of building static pressure that the controller is using.

IntelliPak products must have the 100% power exhaust with Statitrac option for nvoBldgStatPress to be valid.

Table 37. Building Static Pressure Output valid ranges

Range	Invalid	When Transmitted	Update Rate	Default Service Type
• -167 Pa to 167 Pa • -0.67 to 0.67 inches WC	0x7FFF =32.767 Pa	• Significant change. • Send heartbeat time.	• No faster than configured minimum send time. • Send heartbeat time.	Unacknowledged.

Cluster Configuration: nvoClusterConfig

Network Output: config master_slave_t nvoClusterConfig (node extension profile)

Used to indicate the current cluster configuration of the controller. Typically reported to a supervisory controller or another controller. May be used by a service tool to determine cluster configuration.

For IntelliPak products, the enumerations in the range 15 to 254 and MSC_NUL are manufacturer-defined to be the same as MSC_UNKNOWN.

Table 38. Cluster Configuration valid ranges

Range	Meaning	When Transmitted	Update Rate	Default Service Type
0 = MSC_UNKNOWN	Unit cluster status unknown.	Significant change.	No faster than configured minimum send time.	Unacknowledged.
1 = MSC_SLAVE	Unit is a slave in a cluster.			
2 = MSC_MASTER	Unit is a master in a cluster.			
3 TO 254	Unused (invalid).			
0xFF = MSC_NUL	Invalid.			

Condenser Capacity Output: nvoCondCap

Network Output: SNVT_lev_percent nvoCondCap (SCCX and DAC profile)

This network variable reflects the current value of the condenser capacity control output for monitoring. It can be used to provide condenser fan status for air cooled units or water valve status for water cooled units.

For IntelliPak CSC products with the water-cooled condenser option, nvoCondCap reflects the condenser water valve status. For all other IntelliPak products *(including Intellipak Rooftop products with the evaporative condensing option)*, nvoCondCap reflects the condenser fan status.

Table 39. Condenser Capacity Output valid range

Range	Invalid	When Transmitted	Update Rate	Default Service Type
0% to 100%.00	0x7FFF = 163.835% (not present)	• Significant change. • Send heartbeat time.	• No faster than configured minimum send time. • Send heartbeat time.	Unacknowledged.

Condenser Waterflow Output: nvoCWFlow

Network Output: SNVT_switch nvoCWFlow (SCCX and DAC profile)

Transmits the current status of the condenser water flow sensor for monitoring.

Only IntelliPak products with a water-cooled or evaporative condenser will transmit nvoCWFlow. For products with an evaporative condenser, nvoCWFlow indicates the state of the sump fill valve.

Table 40. Condenser Waterflow Output valid ranges

State	Value	Equivalent Percent	Condenser Waterflow Status
0	0	0%	No flow.
1	200	100%	Flow.
0xFF	0	NA	Invalid or not installed.
When Transmitted	**Update Rate**		**Default Service Type**
• Significant change. • Send heartbeat time.	• No faster than configured minimum send time. • Send heartbeat time.		Unacknowledged.

Condenser Water Pump Output: nvoCWPump

Network Output: SNVT_switch nvoCWPump (SCCX and DAC profile)

Transmits the current state of the Condenser Water Pump output for monitoring or control.

Only IntelliPak products with a water-cooled or evaporative condenser and/or a water-side economizer will transmit nvoCWPump. For products with an evaporative condenser, nvoCWPump indicates if the sump pump is active (proved.)

Table 41. Condenser Water Pump Output valid ranges

State	Value	Equivalent Percent	Condenser Waterflow Status
0	NA	0%	Pump **OFF**.
1	200	100%	Pump **ON**.
0xFF	0	NA	Invalid or not installed.
When Transmitted	**Update Rate**		**Default Service Type**
• Significant change. • Send heartbeat time.	• No faster than configured minimum send time. • Send heartbeat time.		Unacknowledged.

Condenser Water Temperature Output: nvoCWTemp

Network Output: SNVT_temp_p nvoCWTemp (SCCX and DAC profile)

Indicates the current value of the condenser water temperature for monitoring. This value will reflect the network input nviCWTemp *(if valid)* or the value from a locally wired sensor.

Only IntelliPak products with a water-cooled or an evaporative condenser and/or water-side economizer will transmit nvoCWTemp. For IntelliPak products with an evaporative condenser, nvoCWTemp indicates the temperature of the sump water.

Table 42. Condenser Water Temperature Output valid range

Range	Invalid	When Transmitted	Update Rate	Default Service Type
-39.94°C to -93.38°C (-39.9°F to 200.1°F)	0x7FFF = 327.67%	• Significant change. • Send heartbeat time.	• No faster than configured minimum send time. • Send heartbeat time.	Unacknowledged.

Discharge Air Dewpoint Temperature Output, nvoDADewPoint

Network Output: SNVT_temp_p nvoDADewPoint (DAC profile)

Indicates the current value of the discharge air dewpoint temperature.

Table 43. Discharge Air Dewpoint Temperature Output valid range

Range	Invalid	When Transmitted	Update Rate	Default Service Type
-39.96°C to -93.33°C (-39.93°F to 200.00°F)	0x7FFF = 327.67%	• Significant change. • Send heartbeat time.	• No faster than configured minimum send time. • Send heartbeat time.	Unacknowledged.

Discharge Air Reheat Setpoint Output, nvoDAReheatSP

Network Output: SNVT_temp_p nvoDAReheatSP (SCCX and DACX profile)

This output network variable indicates the current value of the discharge air reheat setpoint in Celsius (°C).

Only IntelliPak Rooftop products with the dehumidification option transmit nvoDAReheatSP.

Table 44. Discharge Air Reheat Setpoint Output valid ranges

Range	Invalid	When Transmitted	Update Rate	Default Service Type
15.55°C to 32.22°C (-60°F to 90°F)	0x7FFF = 32,767%	• Significant change. • Send heartbeat time.	• No faster than configured minimum send time. • Send heartbeat time.	Unacknowledged.

Dehumidification Status Output, nvoDehumidifier

Network Output: SNVT_switch nvoDehumidifier (SCCX and DAC profile)

Reflects the current status of dehumidification control for monitoring.

IntelliPak Rooftop products with the modulating dehumidification option transmit nvoDehumidifier and report 0–100% capacity.

Table 45. Dehumidification Status Output valid ranges

State	Value	Equivalent Percent	Condenser Waterflow Status
0	0	0%	Disabled.
1	200	0.5% to 100%	Enabled and active.
0xFF	0	0%	Invalid.
When Transmitted	**Update Rate**		**Default Service Type**
• Significant change. • Send heartbeat time.	• No faster than configured minimum send time. • Send heartbeat time.		Unacknowledged.

Discharge Air Temperature Output, nvoDischAirTemp

Network Output: SNVT_temp_p nvoDischAirTemp (SCC and DAC profile)

Used to monitor the unit discharge air temperature.

Table 46. Discharge Air Temperature Output valid range

Range	Invalid	When Transmitted	Update Rate	Default Service Type
-39.96°C to -93.33°C (-39.93°F to 200.00°F)	0x7FFF = 327.67%	• Significant change. • Send heartbeat time.	• No faster than configured minimum send time. • Send heartbeat time.	Unacknowledged.

Duct Static Pressure Output, nvoDuctStatPress

network output SNVT_press_p nvoDuctStatPress; DAC profile

Used for monitoring the effective duct static pressure that the controller is using for control. This value will reflect either the network input nviDuctStatPress or the value from the locally wired duct static pressure sensor, as defined by the manufacturer.

Table 47. Duct Static Pressure Output valid ranges

Range	Invalid	When Transmitted	Update Rate	Default Service Type
• 0 Pa to 1,245 Pa with 0 to 5 inches WC (CSC, RT1) • 0 to 1,990 Pa with 0 to 7.99 inches WC (RT2)	0x7FFF = 327.67%	• Significant change. • Send heartbeat time.	• No faster than configured minimum send time. • Send heartbeat time.	Unacknowledged.

Economizer Enabled Output, nvoEconEnabled

Network Output: SNVT_switch nvoEconEnabled (DAC profile; see SCCX and DACX nvoTraneVar7)

A structure used to report the current Enable/Disable status of the discharge air controller economizer. A space temp controller uses nvoTraneVar7. Refer to the specification for a complete description of when the economizer is enabled and disabled.

The nvoEconEnabled is the enable/disable status of the economizer. It is defined in the profile as *binary*. If the economizer is enabled, it reports (1, 200). If the economizer is disabled, it reports (0, 0). If there is no economizer, it reports (0xFF, 0). Commentary: It does not match nvoUnitStatus.econ_output. It does not show position in percent.

IntelliPak products can have both an air-side and a water-side economizer. Either or both can be enabled or disabled independent of the other. If only the air-side or only the water-side economizer is installed, then the status of that economizer is reported. If both air-side and water-side economizers are installed, the status of the water-side economizer is reported. IntelliPak Rooftop products that have a 0–25% motorized OA damper always report disabled.

Table 48. Economizer Enabled Output valid ranges

State	Value	Equivalent Percent	Condenser Waterflow Status
0	Any	0%	Disabled.
1	200	100%	Enabled.
0xFF	Any	NA	Invalid or not installed.
When Transmitted	**Update Rate**		**Default Service Type**
• Significant change. • Send heartbeat time.	• No faster than configured minimum send time. • Send heartbeat time.		Unacknowledged.

Effective Discharge Dewpoint Setpoint Output, nvoEffDADewPtSP

Network Output: SNVT_temp_p nvoEffDADewPtSP (DAC profile)

Used to monitor the effective discharge air dewpoint setpoint that the Discharge Air Controller is using for control.

Table 49. Effective Discharge Dewpoint Setpoint Output valid range

Range	Invalid	When Transmitted	Update Rate	Default Service Type
7.22°C to 23.89°C (45°F to 75°F)	0x7FFF = 327.67%	• Significant change. • Send heartbeat time.	• No faster than configured minimum send time. • Send heartbeat time.	Unacknowledged.

Effective Discharge Air Temperature Setpoint Output, nvoEffDATempSP

Network Output: SNVT_temp_p nvoEffDATempSP (DAC profile)

Used to monitor the effective discharge air temperature setpoint that the controller is using for control. It may come from nviDAHtSP, nviDAClSP, nciDAHtSP, nciDAClSP, or a locally wired setpoint input.

All IntelliPak products report the currently or last utilized cooling or heating setpoint. IntelliPak Rooftop products with the dehumidification option report the Active Supply Air Reheat Setpoint during dehumidification.

Table 50. Effective Discharge Air Setpoint Output valid range

Range	Invalid	When Transmitted	Update Rate	Default Service Type
4.44°C to 60°C (40°F to 140°F)	0x7FFF = 327.67%	• Significant change. • Send heartbeat time.	• No faster than configured minimum send time. • Send heartbeat time.	Unacknowledged.

Effective Duct Static Pressure Setpoint Output, nvoEffDuctStatSP

Network Output: SNVT_press_p nvoEffDuctStatSP (DAC profile)

Used to monitor the effective duct static pressure setpoint that the controller is using for control. This value may come from nviDuctStaticSP, nciDuctStatSP, or a locally wired setpoint input.

Table 51. Effective Duct Static Pressure Setpoint Output valid ranges

Range	Invalid	When Transmitted	Update Rate	Default Service Type
• 249 Pa to 1,072 Pa with 1.0 to 4.3 inches WC (CSC, RT1) • 174 to 1,270 Pa with 0.7 to 5.1 inches WC (RT2)	0x7FFF = 32,767%	• Significant change. • Send heartbeat time.	• No faster than configured minimum send time. • Send heartbeat time.	Unacknowledged.

Effective Occupancy Output, nvoEffectOccup

Network Output: SNVT_occupancy nvoEffectOccup (SCC and DAC profile)

Used to indicate the current occupancy of the controller. This information is typically reported to a supervisory controller, or provided to another controller to coordinate the operation of multiple units. The occupancy mode is determined by a combination of optional input network variables and logic in the controller, as defined by the controller manufacturer. The network variables which can impact the occupancy state of the controller are; nviOccManCmd *(SCC/DAC)*, nviOccSchedule (SCC/DAC), and nviOccSensor *(only SCC)*. The unit is always in one of the four possible occupancy states. Refer to Table 118, p. 87 for more details about the utilization of nvoEffectOccup.

For IntelliPak products, there is no time-out for nviOccManCmd, it will not heartbeat, and the value is not preserved when power is lost *(it is always initialized to OCC_NUL on power-up)*. Input nviOccManCmd enumerations of OC_UNOCCUPIED and OC_STANDBY can be bypassed. Pressing the zone sensor module Timed Override On button *(if installed)* for less than 8 seconds can change the effective occupancy from unoccupied or standby to bypass. The bypass timer is set to the value in nciBypassTime whenever nviOccManCmd equals OC_BYPASS or the local zone sensor Timed Override On request is received. After the bypass timer is set to nciBypassTime, the controller begins counting down to zero. The bypass timer is cleared to zero whenever nviOccManCmd does not equal OC_BYPASS or the local zone sensor with Timed Override Cancel request is received. If nciBypassTime is set to zero, it disables the OC_BYPASS enumeration for nviOccManCmd and nviOccSchedule. If nciBypassTime is set to zero, it does not disable the TOV Request or TOV Cancel Request in nvoTraneVar7. The human interface displays *Occupied TOV* when placed in bypass by a local zone senor with Timed Override On button and *Occupied* when placed in bypass by nviOccManCmd, nviOccSchedule, or nviOccSensor. Pressing the zone sensor module Timed Override On button for more than 8 seconds will cause the LCI-I controller to broadcast a Service Pin Message *(Neuron ID and Program ID)*.

Table 52. Effective Occupancy Output valid ranges

Range	Invalid	When Transmitted	Update Rate	Default Service Type
0 = OC_OCCUPIED	Always valid.	• Significant change. • Send heartbeat time.	• No faster than configured minimum send time. • Send heartbeat time.	Unacknowledged.
1 = OC_UNOCCUPIED				
2 = OC_BYPASS				
3 = OC_STANDBT				
4 to 255 not used				

Effective Setpoint Output, nvoEffectSetpt

Network Output: SNVT_temp_p nvoEffectSetpt (SCC profile)

Used to monitor the effective space temperature setpoint which may depend on nciSetpoints, nvoEffectOccup, nviSetpoint, nviSetpointOffset, nviSetptShift, nciPersonality2, nvoHeatCool, and any local setpoint adjustment. For example, if the occupancy state is unoccupied and the heat/cool state is heat, then the effective setpoint would be equal to the unoccupied heating setpoint defined in nciSetpoints.

Refer to Table 125, p. 107 for more details.

Table 53. Effective Setpoint Output valid range

Range	Invalid	When Transmitted	Update Rate	Default Service Type
10.00°C to 32.33°C (50°F to 90°F)	0x7FFF	• Significant change. • Send heartbeat time.	• No faster than configured minimum send time. • send heartbeat time.	Unacknowledged.

Effective Space Dehumidification Setpoint Output, nvoEffSpaceDHSP

Network Output: SNVT_lev_percent nvoEffSpaceDHSP (SCCX and DAC profile)

Reflects the effective Space High Limit Humidity Setpoint for monitoring.

Only IntelliPak Rooftop products with the dehumidification option transmit nvoEffSpaceDHSP.

Table 54. Effective Space Dehumidification Setpoint Output valid range

Range	Invalid	When Transmitted	Update Rate	Default Service Type
40% to 65% (RT)	0x7FFF = 163.835% (not present)	• Significant change. • Send heartbeat time.	• No faster than configured minimum send time. • Send heartbeat time.	Unacknowledged.

Effective Space Humidification Setpoint Output, nvoEffSpaceHumSP

Network Output: SNVT_lev_percent nvoEffSpaceHumSP (SCCX and DAC profile)

Reflects the effective Space Low Limit Humidity Setpoint for monitoring. Only IntelliPak Rooftop products transmit nvoEffSpaceHumSP. These products have both occupied and unoccupied humidification setpoints. If humidification is disabled, the invalid value is transmitted.

Table 55. Effective Space Humidification Setpoint Output valid range

Range	Invalid	When Transmitted	Update Rate	Default Service Type
20% to 50%	0x7FFF = 163.835% (not present)	• Significant change. • Send heartbeat time.	• No faster than configured minimum send time. • Send heartbeat time.	Unacknowledged.

Entering Water Temperature, nvoEnterWaterTmp

Network Output: SNVT_temp_p nvoEnterWaterTmp (SCCX and DACX profile; formerly nvoTraneVar5)

Used to report the entering temperature of water used for heating or cooling by the controller.

Only IntelliPak CSC products with a water-cooled condenser and/or a water-side economizer transmit nvoEnterWaterTmp.

Table 56. Entering Water Temperature Output valid range

Range	Invalid	When Transmitted	Update Rate	Default Service Type
-39.94°C to 93.38°C (-39.9°F to 200.1°F)	0x7FFF = 327.67°C	• Significant change. • Send heartbeat time.	• No faster than configured minimum send time. • Send heartbeat time.	Unacknowledged.

Energy Recovery Exhaust Air Bypass Damper Output, nvoEREABPDamper

Network Output: SNVT_lev_percent nvoEREABPDamper (SCCX and DACX profile)

Reflects the current status of the Energy Recovery Exhaust Air Bypass Damper output for monitoring or control.

Only IntelliPak Rooftop products with the Energy Recovery option report nvoEREABPDamper.

Table 57. Energy Recovery Exhaust Air Bypass Damper Output valid range

Range	Invalid	When Transmitted	Update Rate	Default Service Type
0% to 100%	0x7FFF = 163.835% (not present)	• Significant change. • Send heartbeat time.	• No faster than configured minimum send time. • Send heartbeat time.	Unacknowledged.

Energy Recovery Frost Avoidance Status Output, nvoERFrostAvoid

Network Output: SNVT_switch nvoERFrostAvoid (SCCX and DACX profile)

Reflects the current status of the Energy Recovery Frost Avoidance function for monitoring. When the Energy Recovery Exhaust temperature falls below the frost avoidance setpoint, the controller initiates a frost avoidance sequence *(modulates the outside air bypass damper to maintain setpoint, and/or energizes a pre-heater)*.

Only IntelliPak Rooftop products with the Energy Recovery option report nvoERFrostAvoid and it only reflects the enabled or disabled state of the frost avoidance function.

Table 58. Energy Recovery Frost Avoidance Status Output valid ranges

State	Value	Equivalent Percent	Condenser Waterflow Status
0	NA	0%	Disabled (inactive).
1	0	0%	Disabled (inactive).
1	200	100%	Enabled (active).
1	201-255	NA	Invalid.
0xFF	NA	NA	Invalid or not installed.
When Transmitted	**Update Rate**		**Default Service Type**
• Significant change. • Send heartbeat time.	• No faster than configured minimum send time. • Send heartbeat time.		Unacknowledged.

Energy Recovery Leaving Exhaust Temperature, nvoERLvgExhTemp

Network Output: SNVT_temp_p nvoERLvgExhTemp (SCCX and DACX profile)

Used to report the Energy Recovery Leaving Exhaust temperature used by the controller.

Only IntelliPak Rooftop products with the Energy Recovery option transmit nvoERLvgExhTemp.

Table 59. Energy Recovery Leaving Exhaust Temperature Output valid range

Range	Invalid	When Transmitted	Update Rate	Default Service Type
-39.94°C to 93.38°C (-39.9°f to 200.1°F)	0x7FFF = 327.67°C (not present)	• Significant change. • Send heartbeat time.	• No faster than configured minimum send time. • Send heartbeat time.	Unacknowledged.

Energy Recovery Outside Air Bypass Damper Output, nvoEROABPDamper

Network Output: SNVT_lev_percent nvoEROABPDamper (SCCX and DACX profile)

Reflects the current status of the Energy Recovery Outside Air Bypass Damper output for monitoring or control.

Only IntelliPak Rooftop products with the Energy Recovery option transmit nvoEROABPDamper.

Table 60. Energy Recovery Outside Air Bypass Damper Output valid ranges

State	Value	Equivalent Percent	Condenser Waterflow Status
0	NA	NA	Off (inactive).
1	0	0.0%	Off (inactive).
1	1-200	0.5% to 100%	On (active).
0xFF	NA	NA	Invalid or not installed.
When Transmitted	**Update Rate**		**Default Service Type**
• Significant change. • Send heartbeat time.	• No faster than configured minimum send time. • Send heartbeat time.		Unacknowledged.

Energy Recovery Status Output, nvoERStatus

Network Output: SNVT_switch nvoERStatus (SCCX or DACX profile)

A structure used to report the current status of the Energy Recovery output for monitoring.

Only IntelliPak Rooftop products with the Energy Recovery option transmit nvoERStatus and the Value field always reports 0% or 100%.

Table 61. Energy Recovery Status Output valid ranges

State	Value	Equivalent Percent	Condenser Waterflow Status
0	NA	NA	Off (inactive).
1	0	0.0%	Off (inactive).
1	1-200	0.5% to 100%	On (active).
0xFF	NA	NA	Invalid.
When Transmitted	**Update Rate**		**Default Service Type**
• Significant change. • Send heartbeat time.	• No faster than configured minimum send time. • Send heartbeat time.		Unacknowledged.

Exhaust Damper Control Output, nvoExhDamper

Network Output: SNVT_lev_percent nvoExhDamper (SCCX and DAC profile)

Reflects the current status of the Exhaust Damper output for monitoring or control.

- x = Do not care.
- 0x7FFF = Invalid.

Exhaust Fan On/Off Control Output, nvoExhFanOnOff

Network Output: SNVT_switch nvoExhFanOnOff (SCCX and DAC profile)

A structure used by a discharge air controller to control a communicating exhaust fan motor drive.

Table 62. Exhaust Fan On/Off Control Output valid ranges

State	Value	Equivalent Percent	Requested Fan State	Requested Fan Capacity
0	NA	NA	OFF	NA
1	0	0.0%	OFF	NA
1	1-199	0.5% to 99.5%[a]	ON	0.5% to 99.5%[a]
1	200	100%[b]	ON	100%[b]
0xFF	NA	NA	Invalid.	Invalid.
When Transmitted	**Update Rate**		**Default Service Type**	
• Significant change. • Send heartbeat time.	• No faster than configured minimum send time. • Send heartbeat time.		Unacknowledged.	

(a) Units without StatiTrac Control installed: when State is 1, the value is always 0% or 100% (0 or 200).
(b) IntelliPak units do not support nvoExhFanCap. The output nvoExhFanOnOff will always show both the state and speed of the fan.

Exhaust Fan Status Output, nvoExhFanStatus

Network Output: SNVT_switch nvoExhFanStatus (SCCX and DAC profile; see SCCX and DACX nvoTraneVar7)

A structure used to report the current status of the exhaust fan.

For IntelliPak units that do not have Statitrac™ installed, when State is 1, Value will always be 0% or 100%.

Table 63. Exhaust Fan Status Control Output valid ranges

State	Value	Equivalent Percent	Requested Fan State	Requested Fan Capacity
0	0	NA	OFF	NA
1	0	0.0%	OFF	NA
1	1-199	0.5% to 99.5%	ON	0.5% to 99.5%
1	200	100%	ON	100%
0xFF	0	NA	Invalid.	Invalid.
When Transmitted	**Update Rate**		**Default Service Type**	
• Significant change. • Send heartbeat time.	• No faster than configured minimum send time. • Send heartbeat time.		Unacknowledged.	

Fan Speed Output, nvoFanSpeed

Network Output: SNVT_switch nvoFanSpeed (SCC profile; refer to "Supply Fan On/Off Control Output, nvoSupFanOnOff," p. 69 and "Supply Fan Status Output, nvoSupFanStatus," p. 69)

A structure used by a space temp controller to report the current supply fan speed. A discharge air controller uses nvoSupFanOnOff and nvoSupFanStatus.

Table 64. Fan Speed Output valid ranges

State	Value	Equivalent Percent	Requested Fan State	Requested Fan Capacity
0	NA	NA	OFF	NA
1	0	0.0%	OFF	0%
1	200	100%	ON	High or 100%.
0xFF	NA	NA	Invalid.	Invalid.
When Transmitted	**Update Rate**		**Default Service Type**	
• Significant change. • Send heartbeat time.	• No faster than configured minimum send time. • Send heartbeat time.		Unacknowledged.	

Effective Heat/Cool Output, nvoHeatCool

Network Output: SNVT_hvac_mode nvoHeatCool (SCC and DAC profile)

Used to indicate the current heat/cool mode of the controller. Typically reported to a supervisory controller or another controller. May be used to coordinate the operation of multiple units.

See the description of the mode field under "Unit Status Output, nvoUnitStatus," p. 70 for more details on how nvoHeatCool is determined. IntelliPak Rooftop products with the dehumidification option report HVAC_DEHUMDIFICATION during dehumidification.

Table 65. Effective Heat/Cool Output

Range	Invalid	When Transmitted	Update Rate	Default Service Type
0 = HVAC_AUTO	Always invalid.	Significant change or heartbeat.	No faster than config minimum send time send heartbeat time.	Unacknowledged.
1 = HVAC_HEAT				
2 = HVAC_MRNG_WRMUP				
3 = HVAC_COOL				
4 = HVAC_NIGHT_PURGE				
5 = HVAC_PRE_COOL				
6 = HVAC_OFF				
7 = HVAC_TEST				
8 = HVAC_EMERG_HEAT[(a)]				
9 = HVAC_FAN_ONLY				
10 = HVAC_FREE_COOL[(a)]				
11 = HVAC_ICE[(a)]				
12 = HVAC_MAX_HEAT				
13 = HVAC_ECONOMY[(a)]				
14 = HVAC_DEHUMIDIFICATION[(a)]				
15 = HVAC_CALIBRATE[(a)]				
0xFF = HVAC_NUL				

(a) Enumeration item not sent by the controller.

Primary Heat Output, nvoHeatPrimary

Network Output: SNVT_lev_percent nvoHeatPrimary (SCC and DAC profile)

Reflects the current level of the primary heat output *(if hard wired)* or can be used to control a remote primary heat source *(valve, compressor, and so on)*.

Table 66. Primary Heat Output valid range

Range	Invalid	When Transmitted	Update Rate	Default Service Type
0% to 100%	0x7FFF = 163.835% (not present)	• Significant change. • Send heartbeat time.	• No faster than configured minimum send time. • Send heartbeat time.	Unacknowledged.

Secondary Heat Output, nvoHeatSecondary

Network Output: SNVT_lev_percent nvoHeatSecondary (SCC and DACX profile)

Reflects the current level of the secondary heat output *(when present)* or can be used to control a remote secondary heat source *(valve, electric heat, and so on)*.

For Intellipak Rooftop products with the dehumidification option, nvoHeatSecondary reports the active reheat capacity.

Table 67. Energy Recovery Leaving Exhaust Temperature Output valid range

Range	Invalid	When Transmitted	Update Rate	Default Service Type
0% to 100%	0x7FFF = 163.835% (not present)	• Significant change. • Send heartbeat time.	• No faster than configured minimum send time. • Send heartbeat time.	Unacknowledged.

Humidification Status Output, nvoHumidifier

Network Output: SNVT_lev_percent nvoHumidifier (SCC and DAC profile)

Reflects the current level of the humidifier output for monitoring.

Only IntelliPak Rooftop products *(RTM software version 24.x or higher and LCI-I software version 14.x and higher)* transmit nvoHumidifier. The humidification algorithm controls a binary output for a field-supplied humidifier and therefore nvoHumidifier always reports either 0% or 100%.

Table 68. Energy Recovery Leaving Exhaust Temperature Output valid range

Range	Invalid	When Transmitted	Update Rate	Default Service Type
0% to 100%	0x7FFF = 163.835% (not present)	• Significant change. • Send heartbeat time.	• No faster than configured minimum send time. • Send heartbeat time.	1. Unacknowledged.

Local Condenser Water Temperature Output, nvoLocalCWTemp

Network Output: SNVT_temp_p nvoLocalCWTemp (SCCX and DAC profile)

Indicates the current value of a locally wired condenser water temperature sensor.

Only IntelliPak products with a water-cooled or an evaporative condenser transmit nvoLocalCWTemp. For IntelliPak products with an evaporative condenser, nvoLocalCWTemp indicates the temperature of the sump water.

Table 69. Energy Recovery Leaving Exhaust Temperature Output valid range

Range	Invalid	When Transmitted	Update Rate	Default Service Type
-39.94°C to 93.38°C (-39.9°F to 200.1°F)	0x7FFF = 327.67°C (not present)	• Significant change. • Send heartbeat time.	• No faster than configured minimum send time. • Send heartbeat time.	Unacknowledged.

Local Duct Static Pressure Output, nvoLocalDSPress

Network Output: SNVT_press_p nvoLocalDSPress (DACX profile; refer to "Duct Static Pressure Output, nvoDuctStatPress," p. 49)

Used for monitoring the local duct static pressure sensor that the controller is using.

Table 70. Low Duct Static Pressure Output valid ranges

Range	Invalid	When Transmitted	Update Rate	Default Service Type
• 0 Pa to 1,245 Pa with 0 to 5 inches WC (CSC, RT1) • 0 to 1,990 Pa with 0 to 7.99 inches WC (RT2)	0x7FFF = 32,767 Pa	• Significant change. • Send heartbeat time.	• No faster than configured minimum send time. • Send heartbeat time.	Unacknowledged.

Local Outdoor Air Humidity Output, nvoLocalOARH

Network Output: SNVT_lev_percent nvoLocalOARH (DAC profile)

Indicates the value of a locally wired Outdoor Air Relative Humidity sensor.

Table 71. Local Outdoor Air Humidity Output valid range

Range	Invalid	When Transmitted	Update Rate	Default Service Type
10% to 100%	0x7FFF = 163.835% (not present)	• Significant change. • Send heartbeat time.	• No faster than configured minimum send time. • Send heartbeat time.	Unacknowledged.

Local Outdoor Air Temperature Output, nvoLocalOATemp

Network Output: SNVT_temp_p nvoLocalOATemp (DAC profile; refer to "Outdoor Air Temperature Output, nvoOutdoorTemp," p. 63)

Used to monitor the locally wired outdoor air temperature of a discharge air controller.

Table 72. Local Outdoor Air Temperature Output valid range

Range	Invalid	When Transmitted	Update Rate	Default Service Type
-39.96°C to 93.33°C (-39.93°f to 200°F)	0x7FFF = 327.67°C (not present)	• Significant change. • Send heartbeat time.	• No faster than configured minimum send time. • Send heartbeat time.	Unacknowledged.

Local Space Temperature Output, nvoLocalSpaceTmp

Network Output: SNVT_temp_p nvoLocalSpaceTmp (SCC profile)

Value of hard wired input. Can be used for averaging or monitoring.

When a large area is to be controlled with multiple units the effective space temperature should be shared by all units to prevent unequal loading/fighting. This requires a method to average the temperatures near each unit. This variable also can provide a means to monitor local conditions if a communicated space temperature is being used. This is not intended as a way of using the hard wired input as a general purpose input when nviSpaceTemp is present.

For IntelliPak products, when nviSpaceTemp is invalid, nvoLocalSpaceTmp will equal one of the following values, based on sensor source assignments at the human interface, in the following order:

4. Monitor Temperature Source
5. Morning Warm Up Temperature Source during Morning Warm Up
6. Unoccupied Zone Temperature Source during unoccupied mode
7. Occupied Zone Temperature Source

8. Invalid

If nviSpaceTemp is valid, the local sensor source becomes BAS/NETWORK and nvoLocalSpaceTmp will be invalid, unless a sensor source is assigned to Monitor Temperature Source at the human interface.

Table 73. Local Space Temperature Output valid range

Range	Invalid	When Transmitted	Update Rate	Default Service Type
-15°C to 50°C (5°F to 122°F)	0x7FFF = 327.67°C (not present)	• Significant change. • Send heartbeat time.	• No faster than configured minimum send time. • Send heartbeat time.	Unacknowledged.

Master Slave Output 1, nvoMasterSlave1

Network Output: nvoMasterSlave1 (Product Extension profile)

First of two outputs used by a master unit to control the slave unit(s) in a multi-unit cluster. Before a unit will become a master, nvoMasterSlave1 and nvoMasterSlave2 must be bound and nviMasterSlave1 and nviMasterSlave2 must be unbound. Once a unit is a master, all control data is sent to the slave unit(s) and nviMasterSlave1 and nviMasterSlave2 are ignored. All other NVIs and all NVOs are still processed as usual.

Table 74. Master Slave 2 Output valid range

Range	Invalid	When Transmitted	Update Rate	Default Service Type
See structure definition.	See structure definition.	• Significant change. • Send heartbeat time.	• No faster than configured minimum send time. • Send heartbeat time.	Unacknowledged.

Master Slave Output 2, nvoMasterSlave2

Network Output: nvoMasterSlave2 (Product Extension profile)

Second of two outputs used by a master unit to control the slave unit(s) in a multi-unit cluster. Before a unit will become a master, nvoMasterSlave1 and nvoMasterSlave2 must be bound and nviMasterSlave1 and nviMasterSlave2 must be unbound. Once a unit is a master, all control data is sent to the slave unit(s) and nviMasterSlave1 and nviMasterSlave2 are ignored. All other NVIs and all NVOs are still processed as usual.

Table 75. Master Slave 2 Output valid ranges

Range	Invalid	When Transmitted	Update Rate	Default Service Type
See structure definition.	See structure definition.	• Significant change. • Send heartbeat time.	• No faster than configured minimum send time. • Send heartbeat time.	Unacknowledged.

Mixed Air Temperature Output, nvoMATemp

Network Output: SNVT_temp_p nvoMATemp (SCCX and DAC profile; refer to nvoTraneVar7 and "Mixed Air Temperature Output, nvoMixedAirTemp")

Used to monitor the mixed air temp being used by the controller. Also reported as part of the nvoTraneVar7 structure.

IntelliPak products with a ventilation control module (VCM) and a customer-supplied sensor connected to the VCM Aux Temp input or IntelliPak CSC products with a water-side module (WSM) will transmit nvoMATemp.

Table 76. Mixed Air Temperature Output valid range

Range	Invalid	When Transmitted	Update Rate	Default Service Type
-39.94°C to 93.38°C (-39.9°F to 200.1°F)	0x7FFF = 327.67°C	• Significant change. • Send heartbeat time.	• No faster than configured minimum send time. • Send heartbeat time.	Unacknowledged.

Mixed Air Temperature Output, nvoMixedAirTemp

Network Output: SNVT_temp_p nvoMixedAirTemp (SCC profile; refer to nvoTraneVar7 and "Mixed Air Temperature Output, nvoMATemp")

Used to monitor the mixed air temp being used by the controller. Also reported as part of the nvoTraneVar7 structure.

IntelliPak systems with a ventilation control module (VCM) and a customer-supplied sensor connected to the VCM Aux Temp input, and IntelliPak CSC products with a water-side module (WSM) will transmit nvoMixedAirTemp.

Table 77. Mixed Air Temperature Output valid ranges

Range	Invalid	When Transmitted	Update Rate	Default Service Type
-39.94°C to 93.38°C (-39.9°F to 200.1°F)	0x7FFF = 327.67°C	• Significant change. • Send heartbeat time.	• No faster than configured minimum send time. • Send heartbeat time.	Unacknowledged.

Occupancy Scheduler Output, nvoOccSchedule

Network Output: SNVT_tod_event nvoOccSchedule (SCCx and DACx profile)

A structure used to report the occupancy modes of the controller. All IntelliPak products only support the current state field and reports OC NUL for the next state field and zero (0) for the time to next state field.

Table 78. Occupancy Override Output valid ranges

Type	Range	Description	Default	Require/Optional
U08	0 = OC_OCCUPIED 1 = OC_UNOCCUPIED 2 = OC_BYPASS 3 = OC_STANDBY 4 to 255 = OC_NUL	Current state.	FF = 255 = OC_NUL (value not available)	Required
U08	0 = OC_OCCUPIED 1 = OC_UNOCCUPIED 2 = OC_ B YPASS 3 = OC_STANDBY 4 to 255 = OC_NUL	Next state.	FF = 255 = OC_NUL (value not available)	Optional
U16 (SNVT_time_min)	0 to 65,534 minutes	Time to next state.[a]	0 minutes (disabled)	Optional

(a) Not used by controller and is always invalid.

Outdoor Air Damper Output, nvoOADamper

Network Output: SNVT_lev_percent nvoOADamper (SCC and DAC profile)

Reflects the current position of the outdoor air damper *(if hard wired)* or as a request to a remote outdoor air damper.

For IntelliPak Rooftop and CSC products, the outside air damper position will only be valid if the unit has an economizer installed.

Table 79. Outdoor Air Damper Output valid range

Range	Invalid	When Transmitted	Update Rate	Default Service Type
1. 10% to 100%	1. 0x7FFF = 163.835% (not present)	• Significant change. • Send heartbeat time.	• No faster than configured minimum send time. • Send heartbeat time.	Unacknowledged.

Outdoor Air Dewpoint Output, nvoOADewpoint

Network Output: SNVT_temp_p nvoOADewpoint (DACX profile)

This output network variable indicates the current value of the outdoor air dewpoint temperature. This value can be measured or calculated.

Table 80. Outdoor Air Dewpoint Output valid range

Range	Invalid	When Transmitted	Update Rate	Default Service Type
-3.89°C to 29.44°C (25°F to 85°F)	0x7FFF = 327.67°C	• Significant change. • Send heartbeat time.	• No faster than configured minimum send time. • Send heartbeat time.	Unacknowledged.

Outdoor Air Enthalpy Output, nvoOAEnthalpy

Network Output: SNVT_enthalpy nvoOAEnthalpy (SCCX or DAC profile)

Indicates the current value of the outdoor air enthalpy. This output will reflect the value of nviOAEnthalpy *(if valid)*, or the value may be calculated by the controller or measured by a hard wired input.

Table 81. Outdoor Air Enthalpy Output valid ranges

Range	Invalid	When Transmitted	Update Rate	Default Service Type
• 23.26 to 18.41 kilo joules/kilograms • 10 to 35 BTU/lb-m	0x7FFF = 327.67°C (kilo joules/kilograms)	• Significant change. • Send heartbeat time.	• No faster than configured minimum send time. • Send heartbeat time.	Unacknowledged.

Outdoor Airflow Output, nvoOAFlow

Network Output: SNVT_flow nvoOAFlow (DAC profile)

Indicates the current value of the outdoor Airflow for monitoring. This value will reflect the network input nviOAFlow *(if valid)* or the value from a locally wired air flow sensor. Only IntelliPak products with a Ventilation Control Module (VCM) transmit nvoOAFlow.

Table 82. Outdoor Airflow Output valid range

Range	Invalid	When Transmitted	Update Rate	Default Service Type
0 to 30,677 liters/seconds	0x7FFF = 327.67 (liters/seconds)	• Significant change. • Send heartbeat time.	• No faster than configured minimum send time. • Send heartbeat time.	1. Unacknowledged.

Outdoor Air Humidity Output, nvoOutdoorRH

Network Output: SNVT_lev_percent nvoOutdoorRH (SCC and DAC profile)

Indicates the current value of the outdoor air relative humidity for monitoring. This value will reflect the network input nviOutdoorRH *(if valid)* or the value from a locally wired sensor.

Table 83. Outdoor Air Humidity Output valid range

Range	Invalid	When Transmitted	Update Rate	Default Service Type
10% to 90.0%	0x7FFF = 163.835% (not present)	• Significant change. • Send heartbeat time.	• No faster than configured minimum send time. • Send heartbeat time.	Unacknowledged.

Outdoor Air Temperature Output, nvoOutdoorTemp

Network Output: SNVT_temp_p nvoOutdoorTemp (SCC and DAC profile)

Used to monitor the outdoor air temperature being used by the controller. This value will reflect the network input nviOutdoorTemp *(if valid)* or the value from a locally wired sensor.

Table 84. Outdoor Air Temperature Output valid range

Range	Invalid	When Transmitted	Update Rate	Default Service Type
-39.96°C to 93.33°C (-39.93°F to 200°F)	0x7FFF = 327.67°C	• Significant change. • Send heartbeat time.	• No faster than configured minimum send time. • Send heartbeat time.	Unacknowledged.

Return Air Temperature Output, nvoRATemp

Network Output: SNVT_temp_p nvoRATemp (SCCX and DAC profile)

Indicates the current value of the return air temperature for monitoring. This value will reflect the network input nviRATemp *(if valid)* or the value from a locally wired sensor.

For IntelliPak products, nviRATemp is not supported, so nvoRATemp always reflects the sensor connected to the ECEM module *(if valid)*. IntelliPak RT or CSC products with an air-side economizer and comparative enthalpy or the sensor is assigned to a function will transmit valid values for nvoRATemp.

Table 85. Return Air Temperature Output valid range

Range	Invalid	When Transmitted	Update Rate	Default Service Type
-39.96°C to 93.33°C (-39.93°F to 200°F)	0x7FFF = 327.67°C	• Significant change. • Send heartbeat time.	• No faster than configured minimum send time. • Send heartbeat time.	Unacknowledged.

Primary Cool Output, nvoCoolPrimary

Network Output: SNVT_lev_percent nvoCoolPrimary (SCC and DAC profile)

This output network variable reflects the current level of the primary mechanical cooling output *(if hard wired)* or can be used to control a remote mechanical cooling source.

Table 86. Primary Cool Output valid range

Range	Invalid	When Transmitted	Update Rate	Default Service Type
0% to 100.0%	0x7FFF = 163.835% (not present)	• Significant change. • Send heartbeat time.	• No faster than configured minimum send time. • Send heartbeat time.	Unacknowledged.

Return Fan On/Off Control Output, nvoRetFanOnOff

Network Output: SNVT_switch nvoRetFanOnOff (SCCX and DAC profile)

Used to start and stop the return fan. It is typically used to interface with a variable speed motor drive. If it is used as the sole interface to the motor drive, it will contain the on/off as well as the speed signal. However, if it is used in conjunction with nvoRetFanCap, then this output should be only used for on/off control. The structure and definition of nvoRetFanOnOff is exactly the same as nvoRetFanStatus.

Only IntelliPak Rooftop products with the return fan option transmit nvoRetFanOnOff. For IntelliPak Rooftop products with a constant speed return fan option, nvoRetFanOnOff always report 0% or 100%. For IntelliPak Rooftop products with a variable speed return fan option, nvoRetFanOnOff always reports between 0% and 100%. If a VAV with IGV/VFD unit is configured without Statitrac, nvoRetFanOnOff will report invalid (this is an invalid unit configuration.

Table 87. Return Fan On/Off Control Output valid ranges[(a)]

State	Value	Equivalent Percent	Actual or Requested Fan State	Actual or Requested Fan Capacity
0	NA	NA	OFF	NA
1	0	0.0%	OFF	0%
1	1-199	0.5% to 99.5%	ON	0.5% to 99.5%
1	200	100%	ON	100%
0xFF	NA	NA	Invalid	Invalid
When Transmitted	**Update Rate**		**Default Service Type**	
• Significant change. • Send heartbeat time.	• No faster than configured minimum send time. • Send heartbeat time.		Unacknowledged.	

(a) When this output is used with **nvoRetFanCap** to interface with a variable speed motor drive, the value should be set to 200 (100%) whenever there is a fan request to **ON**. The fan speed is defined by **nvoRetFanCap**.

Return Fan Pressure Output, nvoRetFanPress

Network Output: SNVT_press_p nvoRetFanPress (SCCX and DAC profile)

Used for monitoring the local return fan pressure sensor that the controller is using.

Only IntelliPak Rooftop products with a variable speed return fan option transmit nvoRetFanPress and it reports the return plenum pressure.

Table 88. Return Fan Pressure Output valid range

Range	Invalid	When Transmitted	Update Rate	Default Service Type
1. -174 Pa to 872 Pa with 1. -0.7 to 3.5 inches WC	1. 0x7FFF = 32,767 Pa	• Significant change. • Send heartbeat time.	• No faster than configured minimum send time. • Send heartbeat time.	Unacknowledged.

Return Fan Status Output, nvoRetFanStatus

Network Output: SNVT_switch nvoRetFanStatus (SCCX and DAC profile)

A structure used to report the current return fan speed.

Only IntelliPak Rooftop products with the return fan option transmit nvoRetFanStatus. For IntelliPak Rooftop products with a constant speed return fan option, nvoRetFanStatus always reports 0% or 100%. For IntelliPak Rooftop products with a variable speed return fan option,

nvoRetFanStatus always reports between 0% and 100%. If a VAV with IGV/VFD unit is configured without statitrac, nvoRetFanStatus will report invalid *(this is an invalid unit configuration)*.

Table 89. Return Fan Status Output structure definition

Type	Range	Description	Bytes
U08	0 to 200 = Return fan speed.	Value	1
S08	0 = Return fan OFF (ignore value field) 1 = Return Fan ON (value field holds return fan speed) 0xFF = Return fan not present (ignore value field)	State	1
Length			2

Discharge Air Controller, Return Fan						
Control %	**BOP**	**State**	**Value**	**Equivalent Percent**	**Return Fan State**	**Return Fan Capacity**
No running.	OFF	0	0	0.9%	OFF	0.0%
0.0%	OFF	1	0	0.05	OFF	0.0%
100%	ON	1	200	100%	ON	100%
Not present.	OFF	0xFF	200	100%	Not present.	100%

Local Setpoint Output, nvoSetpoint

Network Output: SNVT_temp_p nvoSetpoint (SCC profile)

Used to monitor the locally wired space temperature setpoint. If this setpoint is not locally wired, the output will send the invalid value.

Refer to Table 125, p. 107 for more details.

Table 90. Local Setpoint Output valid range

Range	Invalid	When Transmitted	Update Rate	Default Service Type
105°C to 29.4°C (50°F to 85°F)	0x7FFF = 327.67°C	• Significant change. • Send heartbeat time.	• No faster than configured minimum send time. • Send heartbeat time.	Unacknowledged.

Space CO_2 Sensor Output, nvoSpaceCO_2

Network Output: SNVT_ppm nvoSpaceCO_2 (SCC and DACX profile)

Used to indicate the space CO_2 concentration in ppm from a locally wired CO_2 sensor.

Only IntelliPak products with a Ventilation Control Module (VCM) installed and CO_2 Reset or Demand Controlled Ventilation enabled will transmit nvoSpaceCO_2.

Table 91. Space CO_2 Sensor Output valid range

Range	Invalid	When Transmitted	Update Rate	Default Service Type
0, 50 to 2,000 ppm	0x7FFF = 65,535	• Significant change. • Send heartbeat time.	• No faster than configured minimum send time. • Send heartbeat time.	Unacknowledged.

Space Enthalpy Output, nvoSpaceEnthalpy

Network Output: SNVT_enthalpy nvoSpaceEnthalpy (SCCX and DAC profile)

Indicates the current value of the space enthalpy. This output will reflect the value of nviSpaceEnthalpy (*if valid*), or the value may be calculated by the controller or measured by a hard wired input.

For IntelliPak products, nviSpaceEnthalpy is not supported, so nvoSpaceEnthalpy reports an LCI-I calculated value, using nvoSpaceRH and nvoSpaceTemp *(if both are available)*. Output

nvoSpaceRH equals nviSpaceRH *(if valid)* the local space humidity or return air humidity *(if available)*. Output nvoSpaceTemp equals nviSpaceTemp *(if valid)* or the local active space temperature *(if available)*.

Note: *The local active space temperature may periodically change, based on the current unit mode and sensor source selections. For accurately calculated enthalpy values, care must be taken by the installer to locate the active humidity and temperature sources in close proximity.*

Table 92. Space Enthalpy Output valid range

Range	Invalid	When Transmitted	Update Rate	Default Service Type
20-100 kilo joules/ kilograms	0x7FFF = 327.67 kilo joules/kilograms (not present)	• Significant change. • Send heartbeat time.	• No faster than configured minimum send time. • Send heartbeat time.	Unacknowledged.

Space Humidity Output, nvoSpaceRH

Network Output: SNVT_lev_percent nvoSpaceRH (SCC and DAC profile)

Indicates the current value of the space relative humidity for monitoring. This value will reflect the network input nviSpaceRH *(if valid)* or the value from a locally wired sensor.

If nviSpaceRH is invalid, only IntelliPak products with the dehumidification option or the humidification sensor option or an air-side economizer and comparative enthalpy *(ECEM module)* will transmit valid values for nvoSpaceRH. For IntelliPak Rooftop products, if both the dehumidification or humidification option and the comparative enthalpy options are present, the humidity sensor selected for humidity control source is used.

Table 93. Space Humidity Output valid range

Range	Invalid	When Transmitted	Update Rate	Default Service Type
0% to 100.0%	0x7FFF = 163.835% (not present)	• Significant change. • Send heartbeat time.	• No faster than configured minimum send time. • Send heartbeat time.	Unacknowledged.

Effective Space Temperature Output, nvoSpaceTemp

Network Output: SNVT_temp_p nvoSpaceTemp (SCC and DAC profile)

Used to monitor the effective space temperature that the controller is using. If input nviSpaceTemp has a valid value, this output will echo the value of the input. If a valid value for nviSpaceTemp does not exist, the locally wired sensor value is used. However, if neither value is available, the output will send the invalid value.

For IntelliPak products, if nviSpaceTemp is invalid, nvoSpaceTemp will equal one of the following values based on sensor source assignments at the human interface, in the following order:

9. Monitor Temperature Source
10. Occupied Zone Temperature Source
11. Unoccupied Zone Temperature Source
12. Morning Warm-up Temperature Source during Morning Warm-up
13. Daytime Warm-up Temperature Source during Daytime Warm-up *(only DAC units)*
14. Unoccupied Zone Temperature Source during unoccupied mode
15. Zone Reset Temperature Source *(DAC units with cooling reset set to outside air or heating reset set to outside air or zone)*
16. Occupied Zone Temperature Source *(only SCC units)*

17. Invalid

Table 94. Effective Space Temperature Output valid range

Range	Invalid	When Transmitted	Update Rate	Default Service Type
-15°C to 50°C (5°F to 122°F)	0x7FFF = 327.67°F	• Significant change. • Send heartbeat time.	• No faster than configured minimum send time. • Send heartbeat time.	Unacknowledged.

Status Request Output, nvoStatus

Network Output: SNVT_obj_status nvoStatus (Node profile)

This nvo output is a list of bit fields that indicate the status of the objects in the node. Sent in response to nviRequest or poll or heartbeat. Poll does not update nvoStatus, and as an example, the user will not see a change in the alarm bit. Only nviRequest and heartbeat update nvoStatus.

When Transmitted

Output nvoStatus is transmitted whenever a request is received on the nviRequest input and as one of the nvo with heartbeat. The node object status is sent during the first heartbeat nvoStatus transmission. Then, either the SCC object status or the DAC object status is sent during the second heartbeat nvoStatus transmission (depending on which profile is being used) and the cycle repeats.

Update Rule

The application must update the status such that a poll of the status following the request returns a reasonable value.

- Update Rate: send heartbeat time
- Default Service Type: acknowledged

Table 95. Status Request Output structure definitions, 6 bytes

Type	Description	Report Mask	Byte	Bit	Meaning
U16	Object_ID	NA	0, 1	NA	• Node object • SCC object • DAC object • 3 to 65,535 = Undefined object
Bit	Invalid_ID	0	2	7	A status of invalid_id is reported whenever an nviRequest is received for an object id that is not implemented in the node. Invalid_id is mandatory and is always present and is not set in the report mask.
Bit	Invalid_Request	0	2	6	A status of invalid_request is reported whenever an nviRequest is received for an non-implemented function. Invalid_request is mandatory and is always present and is not set in the report mask.
Bit	Disabled	1	2	5	A status of disabled is reported if a valid object request code is received for the disabled object. The node object is never disabled. The SCC object is disabled when the LCI unit type is FAU, CSC DAC, or RT DAC. The DAC object is disabled when the LCI unit type is CSC SCC or RT SCC. See nciApplication for details on how the LCI unit type and supported profile is determined. The disabled and the out-of-service bits are always both set at the same time in the IntelliPak unit.
Bit	Out_Of_Limits	0	2	4	Object exceeded alarm limits.
Bit	Open_Circuit	0	2	3	Open circuit detected.
Bit	Out_Of_Service	1	2	2	A status of out-of-service is reported if a valid object request code is received for the out_of_service object. The node object is never out-of-service. The SCC object is out-of-service when the LCI unit type is FAU, CSC DAC, or RT DAC. The DAC object is out-of-service when the LCI unit type is CSC SCC or RT SCC. See nciApplication for details on how the LCI unit type and supported profile is determined.
Bit	Mechanical_Fault	0	2	1	Mechanical fault detected.

Table 95. Status Request Output structure definitions, 6 bytes (continued)

Type	Description	Report Mask	Byte	Bit	Meaning
Bit	Feedback_Failrure	0	20		Feedback signals not received.
Bit	Over_Range	0	3	7	Maximum range exceeded.
Bit	Under_Range	0	3	6	Minimum range exceeded.
Bit	Electrical_Fault	0	3	5	Electrical fault detected.
Bit	Unable_To_Measure	0	3	4	I/O line failure.
Bit	Comm_Failure	0	3	3	Network communications failure.
Bit	Fail_Self_Test	0	3	2	Self-test failure.
Bit	Self_Test_In_Progress	0	3	1	Self-test in progress.
Bit	Locked_Out	1	3	0	A status of locked out is reported if a valid object request code is received for the locked out object. The node object is never locked out. The DAC and SCC objects are locked out when one or more circuits are locked out due to 1) Demand Limit, 2) Frost Protection, 3) Low Ambient, or 4) Low Condenser Water temp (CSC water-cooled condenser or Rooftop evaporative condenser only). See nciApplication for details on how the LCI unit type and supported profile is determined.
Bit	Manual_Control	1	4	7	A value of TRUE is reported if the controller is under local control. Tracer Summit will use this bit to indicate whether the IntelliPak unit is in local or remote control.
Bit	In_Alarm	1	4	6	A value of TRUE is reported if the controller has a diagnostic condition. See nvoAlarmMessage for the list of IntelliPak diagnostics that set this bit and nvoUnitStatus in_alarm bit.
Bit	In_Override	0	4	5	Object overridden.
Bit	Report_Mask	1	4	4	Report_mask status is used to document the optional status bits that are supported by the object. The obj_request code RQ_REPORT_MASK causes the object to respond with a mask of supported optional status bits via nvoStatus. A ONE in the mask means that the object may set the corresponding optional bit in the object status when the condition defined for that optional bit occurs. A ZERO means that the optional bit will never be set by the object. When reporting status in response to a RQ_REPORT_MASK, the report_mask bit will be set to distinguish this from other forms of status. The invalid_id and invalid_request bits are mandatory and are not set in the report_mask status.
Bit	Programming_Mode	0	4	3	Object in programming mode.
Bit	Programming_Fail	0	4	2	Object in programming failure.
Bit	Alarm_Notify_Disable	0	4	1	Object alarm disabled.
Bit	Reserved1	0	4	0	Not defined.
8 Bit	Reserved2	00	5	All	Not defined.

Supply Fan On/Off Control Output, nvoSupFanOnOff

Network Output: SNVT_switch nvoSupFanOnOff (DAC profile)

A structure used by a discharge air controller to control a communicating supply fan motor drive.

IntelliPak products do not support nvoSupFanCap, therefore, nvoSupFanOnOff will always show both the state and the speed of the fan. On units without Inlet Guide Vanes (IGV) or a Variable Frequency Drive (VFD) installed, when State is 1, Value will always be 0% or 100% (0 or 200).

Table 96. Supply Fan On/Off Control Output valid ranges

State	Value	Equivalent Percent	Requested Fan State	Requested Fan Capacity
0	NA	NA	OFF	NA
1	0	0.0%	OFF	0%
1	1-199	0.5% to 99.5%	ON	0.5% to 99.5%
1	200	100%	ON	100%
0xFF	NA	NA	Invalid	Invalid
When Transmitted	**Update Rate**		**Default Service Type**	
• Significant change. • Send heartbeat time.	• No faster than configured minimum send time. • Send heartbeat time.		Unacknowledged.	

Supply Fan Status Output, nvoSupFanStatus

Network Output: SNVT_switch nvoSupFanStatus (DAC profile; refer to "Fan Speed Output, nvoFanSpeed," p. 56)

A structure used to report the current supply fan speed of a discharge air controller. A space temp controller uses nvoFanSpeed.

On IntelliPak products without Inlet Guide Vanes (IGV) or a Variable Frequency Drive (VFD) installed, when State is 1, Value will always be 0% or 100% (0 or 200).

Table 97. Supply Fan Status Output valid ranges

State	Value	Equivalent Percent	Actual Fan State	Actual Fan Capacity
0	NA	NA	OFF	NA
1	0	0.0%	OFF	0%
1	1-199	0.5% to 99.5%	ON	0.5% to 99.5%
1	200	100%	ON	100%
0xFF	NA	NA	Invalid	Invalid
When Transmitted	**Update Rate**		**Default Service Type**	
• Significant change. • Send heartbeat time.	• No faster than configured minimum send time. • Send heartbeat time.		Unacknowledged.	

Terminal Load Output, nvoTerminalLoad

Network Output: SNVT_lev_percent nvoTerminalLoad (SCC and DACX profile)

Indicates the current heat/cool energy demand of the unit. Positive values indicate that cooling energy is required *(or in use)* by the controller, while negative values indicate that heating energy is required *(or in use)* by the controller. The actual determination of the value of nvoTerminalLoad is manufacturer-defined. One method is to typically report the output of the heating/cooling control algorithm. Another method is to report only the heating/cooling energy required from a central source, such as a water loop or air handling unit.

Table 98. Terminal Load Output valid range

Range	Invalid	When Transmitted	Update Rate	Default Service Type
-100-0% to 100.0 heating to cooling	Always invalid.	Significant change.	No faster than configured minimum send time.	Unacknowledged.

Unit Status Output, nvoUnitStatus

Network Output: SNVT_hvac_status nvoUnitStatus (SCC and DAC profile)

A structure used to report controller status.

For IntelliPak CSC and RT products, the electric heat capacity reported in the *heat_output_primary* field is divided equally between the number of stages available. This may or may not reflect the actual capacity step for a given stage. This is done because of the number of variations in capacity steps due to model number variations, line voltage, wiring, and sizes of heater elements.

Unlike nvoEconEnabled, nvoUnitStatus.econ_output shows percent open. Output nvoEconEnabled is the enable/disable status of the economizer and is defined in the profile as *binary* (*does not show percent*). If the economizer is enabled, it reports (1, 200). If the economizer is disabled, it reports (0, 0). If there is no economizer, it reports (0xFF, 0). IntelliPak Rooftop products with a 0-25% motorized OA damper always report disabled.

Table 99. Unit Status Output valid ranges

Type	Range	Description	Bytes	Meaning
SNVT_hvac_mode	0 = HVAC_AUTO[a] 1 = HVAC_HEAT 2 = HVAC_MRNG_WRMUP 3 = HVAC_COOL 4 = HVAC_NIGHT_PURGE 5 = HVAC_PRE_COOL 6 = HVAC_OFF 7 = HVAC_TEST 8 = HVAC_EMERG_HEAT[a] 9 = HVAC_FAN_ONLY 10 = HVAC_FREE_COOL[a] 11 = HVAC_ICE 12 = HVAC_MAX_HEAT 13 = HVAC_ECONOMY[a] 14 = HVAC_DEHUMID 15 = HVAC_CALIBRATE[a] 0xFF = HVAC_NUL	Mode (nvoHeatCool)	1	This field reports the same value as nvoHeatCool.
SNVT_lev_percent	0% to 100%, 0x7FFF = invalid	Heat_Output_Primary	2	Status position of heat output.
SNVT_lev_percent	0% to 100%, 0x7FFF = invalid	Heat_Output_Secondary	2	Status position of secondary heat (condenser reheat status).
SNVT_lev_percent	0% to 100%, 0x7FFF = invalid	Cool_Output	2	Status position of cool output.

Table 99. Unit Status Output valid ranges

Type	Range	Description	Bytes	Meaning
SNVT_lev_percent	0% to 100%, 0x7FFF = invalid	Econ_Output (nvoOADamper or nvoEconEnabled)	2	Status position of installed economizer. Report WS Econ cmd if WSE only installed. Report AS Econ if only ASE or both ASE and WSE installed. Report invalid (0x7FFF) if no economizer installed.
SNVT_lev_percent	0% to 100%, 0x7FFF = invalid	Fan_Output	2	Status supply fan speed.
U08	0 = No alarm 1 to 254 = Alarm present 255 = Alarm disabled	In_Alarm (nvoStatus)	1	Refer to nvoAlarmMessage for the alarm that sets bits. The alarm bit is nvoStatus.
Length	NA	NA	12	NA
When Transmitted	**Update Rate**		**Default Service Type**	
• Significant change. • Send heartbeat time.	• No faster than configured minimum send time. • Send heartbeat time.		Unacknowledged.	

(a) Not used by controller and is always invalid.

Configuration

The Tracer LCI-I is factory configured and commissioned with fixed sequences of operation. All of the configuration parameters are predefined and loaded based upon the configuration of the unit. Some *as-built* configuration parameters are adjustable at the human interface. Both Tracer Summit systems and the Trane Rover Service Tool allow access to these parameters to make adjustments to controller operation.

The configuration parameters in the Tracer LCI-I match the unit type with the control mode, cooling and heating sources, and outdoor air damper. The control mode selects the desired unit operation. Refer to Table 100.

Table 100.Tracer LCI-I unit type configuration parameters

Control Mode	Temperature Control
• Constant-volume • Constant-volume • VAV	• Space temperature • Discharge air • Discharge air

Table 101.Heating and cooling source

Cooling Source	Heat Source	Heat Type	Outdoor Air Damper
None	Gas	Staged	None
Hydronic	Electric	Modulating	Outdoor air damper
DX coil	Hot water		
	Steam		

Table 102.Outdoor air damper

Parameter	Valid range	Default Value
Occupied outdoor damper minimum position	0 to 100%	15%
Occupied standby damper minimum position	0 to 100%	15%
Economizer enable temperature (dry bulb)	50°F to 140°F (10°C to 60°C)	75°F (23.9°C)

Table 103.Exhaust fan or damper

Parameter	Valid Range	Default Value
Exhaust fan enable setpoint (Note 1)	0 to 100%	25%

Note: The exhaust fan is energized when the outdoor air damper is equal to or greater than the exhaust fan enable setpoint. The exhaust fan is turned off when the outdoor air damper is less than the exhaust fan enable setpoint.

Table 104.Local zone sensor switch

Parameter	Valid Range	Default Value
Local fan/system switch	Enable or disable	Disable

Table 105.Space temperature setpoints

Default Setpoint	Valid Range	Default Value
Occupied heating setpoint	50°F to 90°F (10°C to 32.22°C)	71°F (21.67°C)
Occupied cooling setpoint	50°F to 90°F (10°C to 32.22°C)	74°F (23.33°C)
Occupied standby heating setpoint	50°F to 90°F (10°C to 32.22°C)	67°F (19.44°C)
Occupied standby cooling setpoint	50°F to 90°F (10°C to 32.22°C)	78°F (25.56°C)
Unoccupied heating setpoint	50°F to 90°F (10°C to 32.22°C)	60°F (15.56°C)
Unoccupied cooling setpoint	50°F to 90°F (10°C to 32.22°C)	85°F (29.44°C)
Heating setpoint low limit[a]	40°F to 115°F (4.44°C to 46.11°C)	40°F (4.44°C)
Cooling setpoint low limit	40°F to 115°F (4.44°C to 46.11°C)	40°F (4.44°C)
Heating setpoint high limit	40°F to 115°F (4.44°C to 46.11°C)	104°F (40°C)
Cooling setpoint high limit	40°F to 115°F (4.44°C to 46.11°C)	104°F (40°C)
Local setpoint	Disable or enable.	Enable

(a) The heating/cooling setpoint low/high limits apply only to the occupied and occupied standby setpoints. They are never applied to the unoccupied setpoints.

Table 106.Discharge air temperature control setpoints and setpoint limits

Setpoint	Valid Range	Default Value
Discharge air cooling setpoint	40°F to 90°F (4.4°C to 32.2°C)	55°F (12.9°C)
Discharge air heating setpoint	40°F to 180°F (4.4°C to 82.2°C)	100°F (37.8°C)

Table 107.Daytime warm-up differential temperature

Setpoint	Valid Range	Default Value
Daytime warm-up initiate setpoint[a]	50°F to 87°F (10°C to 30.56°C)	67°F (19.44°C)
Daytime warm-up terminate setpoint[b]	53°F to 90°F (11.67°C to 32.22°C)	71°F (21.67°C)

(a) When the space temperature is below the daytime warm-up initiate setpoint, the daytime warm-up sequence is initiated.
(b) When the space temperature is above the daytime warm-up terminate setpoint, the daytime warm-up sequence is terminated.

Table 108.Duct static pressure

Parameter	Valid Range	Default Value
Duct static pressure setpoint (RT2)	0.7 to 5.1 inches WC (175 to 1270 Pa)	2.0 inches WC (500 Pa)
Duct static pressure setpoint (RT1, CSC)	1 to 4.3 inches WC (250 to 1071 Pa)	1.5 inches WC (375 Pa) if CSC, 2.0 inches WC (500 Pa) if RT1.

Table 109.Timers

Parameter	Valid Range	Default Value
Power-up control wait.	0 to 6,553.4 seconds	0 seconds
Maintenance required time setpoint (based on fan run hours).	0 to 10,000 hours	0 hours
Occupancy bypass timer.[a]	0 to 240 minutes (1 minute resolution)	• 120 minutes (SCC) • 0 minutes (DAC)

(a) Occupied bypass timer is used for timed override applications when a building automation system (BAS) is not present or when the BAS does not send the occupied (override) request. The timed override timer is maintained in t he LCI-I controller. When the timed override is applicable, the controller reports occupied bypass as it effective occupancy mode.

Table 110.Diagnostic alarm level

Parameter	Valid Range	Default Value
Diagnostic alarm level.[a]	Service required; critical alarm	Service required
Maintenance required time setpoint (based on fan run hours).	0 to 10,000 hours	0 hours
Occupancy bypass timer.	0 to 240 minutes (1 minute resolution)	• 120 minutes (SCC) • 0 minutes (DAC)

(a) Refer to table 21 for a list of alarm messages that can be configured as service required or critical alarm diagnostics. Diagnostics cannot be individually configured.

Configuration Property Definitions

Configuration property definitions are implemented as configuration network variables. They are listed alphabetically in this section by their nciName. For example, nciBldgStatisSP.

Building Static Pressure Setpoint, nciBldgStaticSP

Network Input Configuration: SNVT_press_p nciBldgStaticSP (Type 3, Level 1 DAC profile)

This configuration property defines the Default Building Static Pressure setpoint for the Discharge Air Controller.

- Range:
  - 8 to 74 Pa (0.03 to 0.3 I WC) [RT1, CSC]
  - -49 to 74 Pa (-0.20 to 0.30 IWC) [RT2]
- Default Value: 20 Pa, 0.08 inches WC
- SCPT Reference: SCPTbuildingStaticPressureSetpoint (193)

Local Bypass Time, nciBypassTime

Network Input Configuration: SNVT_time_min nciBypassTime (Type 2, Level 1 SCC and DAC profile)

Maximum time that the controller can be in occupied bypass mode following a single Bypass request from either a local switch or nviOccManCmd.

- Range: 0 to 240 minutes *(0 disables)*
- SCC Default: 120 minutes
- DAC Default: 0 minutes
- SCPT Reference: SCPT bypass Time (34)

Cooling Lockout Temperature Setpoint, nciCoolLockout

Network Input Configuration: SNVT_temp_p nciCoolLockout (Type 3, Level 1 DAC profile)

Defines the outdoor air temperature cooling lockout setpoint for the controller. When the outdoor air temperature is below this value, mechanical cooling will be disabled.

- Range: -28.88°C to 26.66°C (-20°F to 80°F)
- Default Value: 10°C (50°F)
- SCPT Reference: SCPTcoolingLockout (209)

Cooling Reset Enable, nciCoolResetEn

Network Input Configuration: SNVT_switch nciCoolResetEn (Type 3, Level 1 DAC profile)

This configuration property is used to enable/disable the discharge air temperature cooling reset control for the Discharge Air Controller.

IntelliPak products can be configured at the human interface to have *none*, *zone*, or *outside air* reset of the discharge air cooling setpoint. Therefore, the interpretation of the value range allows selection between the two reset types: 0 = disabled, 1-100 = outdoor air reset, 101-255 = zone reset, The invalid value (0xFF) also enables zone reset.

- Default Value: Disabled
- SCPT Reference: SCPTcoolingResetEnable (211)

Table 111. Cooling Reset Enable Configuration structure definitions

Type	Range	Description	Bytes
U08	0 = Disabled (none) 1 to 100 = Enabled (outdoor air) 101 to 255 = Enabled (zone)	Value	1
S08	0 = Disabled (ignore value field) 1 = Value field determines state) 0xFF = Enabled (zone), invalid (ignore value field, default)	State	1
Length			2

Discharge Air Cooling Setpoint, nciDACISP

Network Input Configuration: SNVT_temp_p nciDACISP (Type 3, Level 1, DAC profile)

This configuration property defines a default Discharge Air Cooling setpoint for the Discharge Air Controller.

- Range: 4.5°C to 32.22°C (40°F to 90°F) [RT/CSC]
- Default Value: 12.78°C (55°F)
- SCPT Reference: SCPTdischargeAirCoolingSetpoint (183)

Discharge Air Dewpoint Setpoint, nciDADewPointSP

Network Input Configuration: SNVT_temp_p nciDADewPointSP (Type 3, Level 1, DAC profile)

Defines the default discharge air dewpoint setpoint for the Discharge Air Controller.

Note: *Only IntelliPak FAU products utilize nciDADewPointSP.*

Discharge Air Heating Setpoint, nciDAHtSP

Network Input Configuration: SNVT_temp_p nciDAHtSP (Type 3, Level 1, DAC profile)

This configuration property defines a default Discharge Air Heating setpoint for the Discharge Air Controller.

- Range: 4.5°C to 82.22°C (40°F to 180°F)
- Default Value: 37.78°C (100°F)
- SCPT Reference: SCPTdischargeAirHeatingSetpoint (184)

Discharge Air Reheat Setpoint, nciDAReheatSP

Network Input Configuration: SNVT_temp_p nciDAReheatSP (Type 3, Level 1, SCCX and DACX profile)

The discharge air reheat sequence will start when the discharge air temp falls below the nciDAReheatSP setpoint. The value of nciDAReheatSP must be greater than the value of nciDADewPointSP by at least 3 F.

- Only used by IntelliPak Rooftop with the dehumidification option.
- Valid Range: 18.4°C to 26.66°C (65°F to 80°F)

- Default Value: 21.11°C (70°F)
- UCPT Reference: UCPT_DAReheatSP

Daytime Warm Up Initiate Setpoint, nciDaytime

Network Input Configuration: SNVT_temp_p nciDaytime (Type 3, Level 1, DACX profile)

When the space temperature gets below the daytime warm-up initiate setpoint, the daytime warm-up sequence will start. The value of nciDaytime will always be at least 1.67°C (3°F) below the value of nciDaytimeTerm.

The DACX profile extension specifies Level 2, implemented as Level 1 for IntelliPak units. See nciDaytimeTerm.

- Valid Range: 10°C to 30.56°C (50°F to 87°F)
- Default Value: 19.44°C (67°F)
- UCPT Reference: UCPT_Daytime

Daytime Warm Up Termination Setpoint, nciDaytimeTerm

Network Input Configuration: SNVT_temp_p nciDaytimeTerm (Type 3, Level 1, DACX profile)

When the space temperature gets above the daytime warm-up termination setpoint, the daytime warm-up sequence will end. The value of nciDaytimeTerm will always be at least 1.67°C (3°F) above the value of nciDaytime.

- Valid Range: 11.67°C to 32.22°C (3°F to 90°F)
- Default Value: 21.67°C (71°F)
- UCPT Reference: UCPT_DaytimeTerm

Device Build Version Number, nciDevBuildNum

Network Input Configuration: unsigned int nciDevBuildNum (Type 1, Level 1, Node Ex profile)

This configuration property defines the build version number for the device and is read-only. It cannot be written.

- SCPT: UCPTdevBuildNum
- SCPT Index: U16
- Valid Range: 2
- Default Value: 2

Device Major Version Number, nciDevMajVer

Network Input Configuration: unsigned short nciDevMajVer (Type 1, Level 1, Node profile)

This configuration property defines the major version number for the device and is read-only. It cannot be written. This number stays in sync with the SPID. This number is the same for all nodes with the same SPID.

- SCPT: UCPTdevMajVer
- SCPT Index: 165

- Valid Range: 2
- Default Value: 2

Device Minor Version Number, nciDevMinVer

Network Input Configuration: unsigned short nciDevMinVer (Type 1, Level 1, Node profile)

This configuration property defines the minor version number for the device and is read-only. It cannot be written. It matches the application software part number extension.

- Valid Range: 14
- Default Value: 14
- SCPT: UCPTdevMinVer
- SCPT Index: 166

Duct Static Pressure Limit, nciDuctStatLim

Network Input Configuration: SNVT_press_p nciDuctStatLim (Type 3, Level 1, DAC profile)

This configuration property defines the Duct Static Pressure Limit for the Discharge Air Controller. This limit is used for equipment protection.

For IntelliPak products, a manual diagnostic occurs after 3 successive high duct static limit trips.

- Range:
  - 300 to 1170 Pa (1.2 to 4.7 inches WC) [CSC, RT1]
  - 300 to 1419 Pa (1.2 to 5.7 inches WS) [RT2]
- Default Value: 1,000 Pa (4 inches WC)
- SCPT Reference: SCPTductStaticPressureLimit (192)

Duct Static Pressure Setpoint, nciDuctStatSP

Network Input Configuration: SNVT_press_p nciDuctStatSP (Type 3, Level 1, DAC profile)

This configuration property defines a default Duct Static Pressure setpoint for the Discharge Air Controller.

- Range:
  - 250 Pa to 1071 Pa (1.0 to 4.3 inches WC) [CSC, RT1]
  - 175 Pa to 1270 Pa (0.7 to 5.1 inches WC) [RT2]
  - 500 Pa (2.0 inches WC) [RT 1, RT2]
  - 375 Pa (1.5 inches WC) [CSC]
- SCPT Reference: SCPTductStaticPressureSetpoint (189)

Energy Recovery Frost Avoidance Setpoint, nciERFrostAvoidSP

Network Input Configuration: SNVT_temp_p nciERFrostAvoidSP (Type 3, Level 1, SCCX and DACX profile)

This configuration property defines a default Energy Recovery Frost Avoidance setpoint for the controller. When the Energy Recovery Exhaust temperature falls below the frost avoidance

setpoint, the controller initiates a frost avoidance sequence (modulates the outside air bypass damper to maintain setpoint, and/or energizes a pre-heater.)

Only IntelliPak II Rooftop products with the Energy Recovery option utilize nciERFrostAvoidSP.

- Range: -17.77°C to 4.44°C (0°F to 40°F)
- Default Value: -2.77°C (27°F)
- SCPT Reference: UCPT_ERFrostAvoidSP

Exhaust Enable Position, nciExhaustConfig

Network Input Configuration: SNVT_lev_percent nciExhaustConfig (Type 3, Level 1, SCCX profile; refer to "Exhaust Enable Position, nciExhStartPos")

Defines the exhaust enable outdoor air damper position setpoint for a space temp controller. A discharge air controller uses nciExhStartPos.

IntelliPak products ignore values greater than 100% *(101% does not disable exhaust)*

- Typical Range: 0% to 100% *(101% disables)*
- Default Value: 25%
- UCPT Reference: UCPT_exhaust_cfg

Exhaust Enable Position, nciExhStartPos

Network Input Configuration: SNVT_lev_percent nciExhStartPos (Type 3, Level 1, DAC profile; refer to "Exhaust Enable Position, nciExhaustConfig")

Defines the exhaust enable outdoor air damper position setpoint for a discharge air controller. A space temp controller uses nciExhaustConfig

IntelliPak products ignore values greater than 100% *(101% does not disable exhaust)*

- Range: 0% to 100% *(101% disables)*
- Default Value: 25%
- SCPT Reference: SCPTexhaustEnablePosition (202)

Fan Operation, nciFanOperation

Network Input Configuration: fan_operation_t nciFanOperation (Type 3, Level 1, SCC profile)

An enumerated value specifying fan operation during occupied and occupied standby. Fan operation during unoccupied mode is manufacturer defined.

For IntelliPak equipment, nciFanOperation specifies the default fan operation when in occupied mode. It can be overridden during supply fan bypass *(only CSC products)* or by fan switches on zone sensors or night-setback panels *(if equipped).* Only enumerations 0=HVF_CONTINUOUS and 1=HVF_CYCLE are supported. Unsupported enumerations are ignored.

Table 112. Fan Operation valid ranges

Range	Default Value	SCPT Reference
0 = HVF_CONTINUOUS = Fan runs continuously 1 = HVF_CYCLE = Fan cycles with heating and cooling. 2 = HVF_CON_CYCLE = Fan runs continuously in Occupied mode and cycles with heating/cooling in Standby mode. 3 = HVF_CYCLE_HEAT = Fan cycles with only heating. 4 = HVF_ CYCLE_COOL = Fan cycles with only cooling. 0xFF = HVF_NUL	1; Fan cycles with heating and cooling.	SCPTFanOperation (260)

Heating Reset Enable, nciHeatResetEn

Network Input Configuration: SNVT_switch nciHeatResetEn (Type 3, Level 1, DAC profile)

This configuration property is used to enable/disable the discharge air temperature heating reset control for the Discharge Air Controller.

IntelliPak products can be configured at the human interface to have *none*, *zone*, or *outside air* reset of the discharge air heating setpoint. Therefore, the interpretation of the value range allows selection between the two reset types: 0 = disabled, 1-100 = outdoor air reset, 101-255 = zone reset, The invalid value (0xFF) also enables zone reset.

- Default Value: Disabled
- SCPT Reference: SCPTheatingResetEnable (212)

Table 113. Heating Reset Enable Configuration structure definitions

Type	Range	Description	Bytes
U08	0 = Disabled (none) 1 to 100 = Enabled (outdoor air) 101 to 255 = Enabled (zone)	Value	1
S08	0 = Disabled (ignore value field) 1 = Value field determines state) 0xFF = Enabled (zone), invalid (ignore value field, default)	State	1
Length			2

HVAC Unit Type Identifier, nciHvacType

Network Input Configuration: SNVT_hvac_type nciHvacType (Type 1, Level 255, SCC and DACX profile)

This configuration property is not used by the controller for any purpose. It is used to identify the type of HVAC unit that is being controlled. Although the HVAC Unit Type can be read via the network, typically, it should not be changed. The configuration property SCPThvacType should be declared using the device_specific_flg so that it can be protected by the network configuration tool to avoid inadvertent modification in the field by the installer. In addition, the use of device_specific_flg allows devices to have a common *.XIF file, where the only network interface difference is the value of this configuration property. If it is changed, the user must verify the application for the selected HVAC Unit Type.

Table 114. HVAC Unit Type Identifier valid ranges

Range	Default Value	SCPT Reference
0 = HVT_GENERIC = Generic. 1 = HVT_FAN_COIL= Fan coil. 2 = HVT_VAV = Variable-air-volume terminal. 3 = HVT_HEAT_PUMP = Heat pump. 4 = HVT_ROOFTOP = Rooftop unit. 5 = HVT_UNIT_VENT = Unit ventilation. 6 = HVT_CHILL_CEIL = Chiller ceiling. 7 = HVT_RADIATOR = Radiator. 8 = HVT_AHU = Air handler. 9 = HVT_SELF_CONT = Self-contained unit.	4 = Rooftop unit.	SCPThvacType (169)

Location Label, nciLocation

Network Input Configuration: SNVT_str_asc nciLocation (Type 2, Level 1, SCC and DAC profile)

Can be used to provide more descriptive physical location information than can be provided by the Neuron Chip 6 byte location string.

For IntelliPak products:

- Range: Any NULL terminated ASCII string of 31 bytes total length
- Default Value: Tracer LCI-I IntelliPak
- SCPT Reference: SCPTlocation (17)

Minimum Outdoor Airflow Setpoint, nciMinOAFlowSP

Network Input Configuration: SNVT_flow nciMinOAFlowSP (Type 3, Level 1, SCCX and DAC profile)

This configuration property defines the default minimum outdoor airflow setpoint for the Discharge Air Controller.

- Range:
  - 0 to 27,606 liters/sec
  - 0 to 58,500 cfm
- Default Value:
  - 1038 liters/seconds
  - 2200 cfm
- SCPT Reference: SCPTminOutdoorAirFlowSetpoint (198)

Minimum Send Time, nciMinOutTm

Network Input Configuration: SNVT_time_sec nciMinOutTm (Type 2, Level 1, SCC and DAC profile)

This is the minimum period of time between any two send-on-delta nvo transmissions. Input nciMinOutTm is used only by send on delta. Input nciMinOutTm is not used by the send-on heartbeat function. If nciMinOutTm = 0xFFFF (6,553.5 seconds), the invalid value, the controller will use the default value, 2.5 seconds, for the minimum send time. If nciMinOutTm = 0, there is no minimum time requirement between send-on-delta transmissions. Send-on-delta transmissions happen as fast as possible when nciMinOutTm = 0.

- Range: 0 to 6,553.4 seconds
- Default Value: 2.5 seconds
- SCPT Reference: SCPTminSendTime (52)

Outdoor Air Enthalpy Setpoint, nciOAEnthSP

Network Input Configuration: SNVT_enthalpy nciOAEnthSP (Type 3, Level 1, DAC profile)

This configuration property defines the default airside economizer outdoor air enthalpy enable setpoint for the Discharge Controller.

For IntelliPak equipment, nciOAEnthSP is used when comparative enthalpy option is not installed (*or when comparative enthalpy option is installed and reference enthalpy is selected as the fail_over and the return air temperature and/or return air humidity sensors fail*).

- Range:
  - 44.2 to 65 kilo joules/kilograms
  - 19-28 Btu/lb.
- Default Value:
  - 58 kilo joules/kilograms
  - 25 Btu/lb.
- SCPT Reference: SCPToutdoorAirEnthalpySetpoint (200)

Outdoor Airflow Calibration, nciOAFlowCalib

Network Input Configuration: SNVT_multiplier nciOAFlowCalib (Type 3, Level 1, DAC profile)

This configuration property defines the gain for the outdoor airflow calibration for the Discharge Air Controller.

For IntelliPak products, this is the Minimum OA Flow Calibration Gain *(which can be set from 0.5 to 1.5 at the human interface Outside Air Ventilation Setup submenu)*. In addition, there is a Minimum OA Flow Calibration Offset, which is only accessible from the human interface.

For IntelliPak II products with two airflow measurement stations, polling nciOAFlowCalib reports the rear *(opposite service side)* station, while writing nciOAFlowCalib updates both stations. If independent calibration is required, it must be performed at the human interface.

- Range: 0.500 to 1.500
- Default Value: 1.000
- SCPT Reference: SCPTsensConstVAV (67)

Outdoor Air Damper Minimum Position, nciOAMinPos

Network Input Configuration: SNVT_lev_percent nciOAMinPos (Type 3, Level 1, SCC and DAC profile)

Defines a default Minimum Outdoor Air Damper Position setpoint for the controller. This input is overridden by nviOAMinPos, if valid.

- Range: 0% to 100%
- Default Values: 15%; CSC and RT
- SCPT Reference: SCPTminRnge (23)

Outdoor Air Temperature Setpoint, nciOATSP

Network Input Configuration: SNVT_temp_p nciOATSP (Type 3, Level 1, DAC profile; see nciEconConfig)

Defines the airside economizer outdoor air temperature enable setpoint for a discharge air controller. A space temp controller uses nciEconConfig. A discharge air controller can use the economizing enable point field of nciEconConfig *(one will overwrite the other)*.

- Range: 10°C to 60°C (50°F to 140°F)
- Default Value: 23.88°C (75°F)
- Hysteresis: 2.78°C (5°F)

- SCPT Reference: SCPToutdoorAirTempSetpoint (199)

Receive Heartbeat, nciRcvHrtBt

Network Input Configuration: SNVT_time_sec nciRcvHrtBt (Type 2, Level 1, SCC and DAC profile)

Used to control the maximum time that elapses after the last update to an nvi before the controller starts to use its default values. If nciRcvHrtBt = 0xFFFF *(invalid)*, the controller will use the default value *(900 seconds)* for the receive heartbeat time. A heartbeat nvi will revert to its invalid value in one to two receive heartbeat times after its last valid reception. There is one receive heartbeat timer to handle all of the heartbeat NVIs. If nciRcvHrtBt = 0 *(disable)*, then the heartbeat nvi will never revert to their *invalid* values.

Table 115. Receive Heartbeat valid ranges

Network Variable Input	Specified to Receive Heartbeat in Table?	Bound?	Result: Use Receive Heartbeat?
Category 1	Yes	Yes	Yes
Category 2	Yes	No	Yes
Category 3	No	Don't Care	No

Return Fan Pressure Setpoint, nciRetFanPressSP

Network Input Configuration: SNVT_press_p nciRetFanPressSP (Type 3, Level 1, DAC profile)

This configuration property defines the Return Fan Static Pressure setpoint for the Discharge Air Controller.

IntelliPak Rooftop products configured with a return fan use this for the maximum return plenum pressure setpoint.

- Range: 25 to 622 Pa (0.1 to 2.5 inches WC)
- Default Value: 300 Pa (1.2 inches WC)
- SCPT Reference: SCPTminRnge (23)

Occupancy Temperature Setpoints, nciSetpoints

Network Input Configuration: SNVT_temp_setpt nciSetpoints (Type 4, Level 1, SCC and DAC profile)

A structure to define the space temperature setpoints. The values of the individual setpoints within nciSetpoints must be kept in ascending order as follows: *unoccupied_heat*, *standby_heat*, *occupied_heat*, *occupied_cool*, *standby_cool*, *unoccupied_cool*.

Table 116. Occupancy Temperature Setpoint structure definition, SCPT reference, and SCPTsetPnts (60)

Type	Description	nci Type	Range	Default	Bytes
SNVT_temp_p	Occupied cooling setpoint	3	10°C to 32.22°C (50°F to 90°F)	23.33°C (74°F)	2
SNVT_temp_p	Occupied standby cooling setpoint	2	10°C to 32.22°C (50°F to 90°F)	25.56°C (78°F)	2
SNVT_temp_p	Unoccupied cooling setpoint	3	10°C to 32.22°C (50°F to 90°F)	29.44°C (85°F)	2
SNVT_temp_p	Occupied heating setpoint	3	10°C to 32.22°C (50°F to 90°F)	21.67°C (71°F)	2
SNVT_temp_p	Occupied standby heating setpoint	2	10°C to 32.22°C (50°F to 90°F)	19.44°C (67°F)	2
SNVT_temp_p	Unoccupied heating setpoint	3	10°C to 32.22°C (50°F to 90°F)	15.56°C (60°F)	2
Length					12

Send Heartbeat, nciSndHrtBt

Network Input Configuration: SNVT_time_sec nciSndHrtBt (Type 2, Level 1, SCC and DAC profiles)

This is the maximum period of time that will expire before each bound heartbeated nvo will be automatically updated once. The controller will divide the number of heartbeated nvos into the configured send heartbeat time to determine how often to send one heartbeated nvo. The heartbeated nvos will be sent in a round robin fashion. Only the bound network variable outputs will actually be transmitted on the Comm5 link. The configured minimum send time *(nciMinOutTm)* is ignored. If nciSndHrtBt = 0x7FFF *(6,553.5 seconds)*, the invalid value, the controller will use the default value, 300 seconds, for the send heartbeat time.

- Range: 0 to 6,553.4 seconds (0 disables)
- Default Value: 300 seconds
- SCPT Reference: SCPTmaxSendTime (49)

Table 117. Send Heartbeat valid ranges

Network Variable Output	Specified to Receive Heartbeat in Table?	Result: Use Receive Heartbeat?
Category 1	Yes	Yes
Category 2	No	No

Space CO_2 Limit, nciSpaceCO_2Lim

Network Input Configuration: SNVT_ppm nciSpaceCO_2Lim (Type 3, Level 1, SCC profile)

Defines a high limit CO_2 setpoint for the controlled space. The controller ventilation functions, in response to this limit, are manufacturer defined.

For IntelliPak products (with TRAQ sensors) that provide a CO_2 Reset function, nciSpaceCO_2Lim correlates to the CO_2 Reset Max setpoint, which defines the CO_2 level which provides the most reset (increase) to the Minimum OA CFM setpoint.

For IntelliPak products that provide a Demand Control Ventilation function, nciSpaceCO_2Lim correlates to the Default Design Minimum CO_2 Setpoint, which defines the CO_2 level which opens the TRAQ dampers to the Design Minimum OA Flow Setpoint *(for units with TRAQs)* or opens the OA Damper to the Design Minimum OA Damper Setpoint *(for units without TRAQs).*

IntelliPak products do not support disabling reset or Demand Controlled Ventilation by sending a value of zero. Input nciSpaceCO_2Lim cannot be set lower than 150 ppm, or lower than nciSpaceCOvLowLm + 100 ppm, or greater than 2000 ppm.

- Range: 150 to 2,000 ppm (0 disables)
- Default Value: 1,000 ppm
- SCPT Reference: SCPTlimitCO_2 (42)

Space Dehumidification Setpoint, nciSpaceDehumSP

Network Input Configuration: SNVT_lev_percent nciSpaceDehumSP (Type 3, Level 1, DAC profile; see nciSpaceRHSetpt)

This configuration property defines the default space dehumidification setpoint for the Discharge Air Controller.

IntelliPak Rooftop products with the dehumidification option use nciSpaceDehumSP for both the default occupied dehumidification setpoint and the default unoccupied dehumidification setpoint. When nciSpaceDehumSP is written, both setpoints are changed. SCC products use nciSpaceRHSetpt.

- Range: 40% to 65% (RT)
- Default Value: 60%
- SCPT Reference: SCPThumSetpt (36)

Space Humidification Setpoint, nciSpaceHumSP

Network Input Configuration: SNVT_lev_percent nciSpaceHumSP (Type 3, Level 1, DAC profile)

This configuration property defines the default space humidification setpoint for the Discharge Air Controller.

Only Intellipak Rooftop products with the humidification option utilize nciSpaceHumSP. It is used for both the occupied and unoccupied humidification setpoint and is limited to the range 20% to 50%. The occupied and unoccupied setpoints can be set independently from the human interface. When polled, nciSpaceHumSP may report different values based on the current unit occupancy. When nciSpaceHumSP is written, both setpoints are changed.

- Range: 20% to 50%
- Default Value: 30%
- SCPT Reference: SCPTspaceHumSetpoint (203)

Space Humidity Setpoint, nciSpaceRHSetpt

Network Input Configuration: SNVT_lev_percent nciSpaceRHSetpt (Type 3, Level 1, SCC profile; see nciSpaceDehumSP)

This configuration property defines a high humidity setpoint for the controlled space. The controller dehumidification functions, in response to this limit, are defined by the manufacturer.

All SCC IntelliPak Rooftop products with the dehumidification option use nciSpaceRHSetpt for the default occupied and unoccupied dehumidification setpoints.

IntelliPak products are limited to a range from 40% to 65%. The default value is 60%, instead of the profile recommended 0%. Values below 40% are clamped to 40%, therefore, a value of 0% does not disable dehumidification as recommended in the SCC profile (refer to the section, "Dehumidification Enable Input: nviDehumEnable," p. 26 or, if using Tracer Summit, the proprietary occ/unocc enable/disable function). Values above 65% are clamped to 65%. The occupied and unoccupied setpoints can be set independently from the human interface. When polled, nciSpaceRHSetpt may report different values based on the current unit occupancy. When nciSpaceRHSetpt is written, both setpoints are changed. DAC products use nciSpaceDehumSP.

- Range: 40 to 65%
- Default Value: 60%
- SCPT Reference: SCPThumSetpt (36)

Operation Modes and General Information

This section provides operation modes and general information about the Tracer LCI-I.

Operation Modes

Temperature Control Modes

The Tracer LCI-I can be configured to operate in the following temperature control modes:

- Constant-volume (CV) space temperature control (SCC)
- Constant-volume (CV) discharge air temperature control (DAC)
- Variable-air-volume (VAV) discharge air temperature control (DAC)

Constant-Volume Space Temperature Control (Cascade Control) (SCC)

For this type of control, the Tracer LCI-I requires both a space-temperature and discharge-air-temperature sensor. In this control mode, the controller compares the space temperature to the space heat/cool setpoint to generate a discharge air temperature setpoint. The controller modulates its heating or cooling outputs to control the discharge air temperature to the discharge air temperature setpoint. This calculated discharge air temperature setpoint is the desired discharge air temperature *(supply air temperature)* that the unit must deliver to maintain space temperature at the space heating or cooling setpoint.

The space temperature can be hard wired to the RTM module Zone Temp input *(only 10 kW thermistor)* or can be communicated to the controller using LonTalk. Similarly, cooling and/or heating setpoint(s) can be provided by a hard wired zone sensor, a night setback panel, a LonTalk communicated value, or by using the stored default setpoints in the controller.

The discharge air temperature must be a hard wired analog input to the RTM module *(only 10 kW thermistor)*.

Constant-Volume Discharge Air Temperature Control (DAC)

For this type of control, the Tracer LCI-I requires only a discharge air sensor *(only 10 kW thermistor)* to operate. This control mode modulates the heating or cooling outputs to maintain the discharge air temperature at the discharge air temperature setpoint.

Variable-Air-Volume (VAV) Discharge Air Control (DAC)

For this type of control, the Tracer LCI-I maintains a discharge air temperature according to the cool/heat discharge air setpoint, and duct static pressure at the duct static pressure setpoint. The controller maintains duct static pressure by modulating the supply fan inlet guide vanes (IGV) or the variable frequency drive (VFD).

Occupancy Modes

Active heating and cooling setpoints are affected by the occupancy mode of the controller. The controller occupancy mode is determined by either a hard wired input *(such as a zone sensor, night setback panel, or changeover switch)* or by a communicated request *(such as from a system-level controller or another peer controller)*.

A stand-alone controller uses the binary input to switch between occupied and unoccupied. For peer-to-peer applications, refer to the section, "Peer-to-peer Communication," p. 92.

Valid Occupancy Modes

The valid occupancy modes of the Tracer LCI-I are:

Occupied

Normal operating mode for occupied spaces or daytime operation.

Unoccupied

Normal operating mode for unoccupied spaces or nighttime operation.

Occupied Standby

Constant-volume mode used to reduce the heating and cooling demands during the occupied hours when the space is vacant or unoccupied. For example, the controller may use occupied standby mode for a classroom while the students are out of the room.

Occupied Bypass

The mode used for timed override conditions. For example, if the controller is in unoccupied mode and someone presses the **ON** button on the zone sensor or night setback panel, the controller is placed in occupied bypass mode for 120 minutes *(adjustable)* or until someone presses the **Cancel** button on the zone sensor.

Determining the Occupancy Mode

The occupancy of the controller is determined by evaluating the combination of three potential communicating inputs, as well as the hard wired occupancy input and the occupied bypass timer. The following three communicating inputs affect the controller occupancy mode. Maximum flexibility is provided by having all three of these inputs; however, the number that you use varies with the application and the features available in your building automation system. Refer to Table 118, p. 87.

Manual Command Occupancy Input

Some communicating devices may request occupancy based on the information communicated in the network variable nvoOccManCmd. Trane systems and zone sensors do not communicate this information to the controller, but the Tracer LCI-I accepts this network variable as communicated input nviOccManCmd.

Schedule Occupancy Input

Building automation systems normally communicate an occupancy request using the occupancy—schedule input. The Tracer LCI-I accepts communicated occupancy schedule as a network variable input nviOccSchedule.

Sensor Occupancy Input

Some occupancy sensors may be equipped with the ability to communicate an occupancy mode to the controller. In such devices, the network variable input nviOccSensor is used to communicate occupancy to the controller. Trane systems and zone sensors do not currently send this variable. The hard wired occupancy input of this controller is handled as if it is a communicated occupancy sensor input. When both a hard wired input and a communicated input exist, the communicated input is used.

Table 118.Effect of occupancy commands on the controller[a]

Local/ Remote Control	Local Timed Override	Local OCC Command	Unit Type	nviApplicMode[b]	nviHeatCool (SCC) [b]	OCC Man Command nviOccManCmd[c]	OCC Sched nviOccSchedule	NSB Panel Input status	NSB OCC Request	OCC Sensor nviOcc Sensor (only SCC)[d]	RTM OCC Binary Input	LCI Internal Bypass Timer [e]	Controller Effect OCC	Unit OCC Mode
Local	Yes	X	X	X	X	X	X	X	X	X	X	X	Bypass	Occ
Local	No	Occ	X	X	X	X	X	X	X	X	X	X	Occ	Occ
Local	No	Unocc	X	X	X	X	X	X	X	X	X	X	Unocc	Unocc
Remote	X	X	RT or CSC	MRNG WRMUP	X	X	X	X	X	X	X	X	Occ	Occ
Remote	X	X	RT or CSC	NIGHT PURGE	X	X	X	X	X	X	X	X	Unocc	Occ[5]
Remote	X	X	RT or CSC	PRE-COOL	X	X	X	X	X	X	X	X	Occ	Occ
Remote	X	X	RT or CSC (SCC)	AUTO or NUL	MRNG WRMUP	X	X	X	X	X	X	X	Occ	Occ

Table 118.Effect of occupancy commands on the controller[a] (continued)

Local/ Remote Control	Local Timed Override	Local OCC Command	Unit Type	nviApplicMode[b]	nviHeatCool (SCC) [b]	OCC Man Command nviOccManCmd[c]	OCC Sched nviOccSchedule	NSB Panel Input status	NSB OCC Request	OCC Sensor nviOcc Sensor (only SCC)[d]	RTM OCC Binary Input	LCI Internal Bypass Timer [e]	Controller Effect OCC	Unit OCC Mode
Remote	X	X	RT or CSC (SCC)	AUTO or NUL	NIGHT PURGE	X	X	X	X	X	X	X	Unocc	Occ[f]
Remote	X	X	RT or CSC (SCC)	AUTO or NUL	PRE-COOL	X	X	X	X	X	X	X	Occ	Occ
Remote	X	X	X	X	X	Occ[e]	X	X	X	X	X	X	Occ	Occ
Remote	X	X	X	X	X	Unocc[e]	X	X	X	X	X	Zero	Unocc	Unocc
Remote	X	X	X	X	X	Unocc[e]	X	X	X	X	X	Not Zero	Bypass	Occ
Remote	X	X	X	X	X	Byp[e]	Occ	X	X	X	X	X	Occ	Occ
Remote	X	X	X	X	X	Byp[e]	Unocc	X	X	X	X	Zero	Unocc	Unocc
Remote	X	X	X	X	X	Byp[e]	Unocc	X	X	X	X	Not Zero	Bypass	Occ
Remote	X	X	X	X	X	Byp[e]	Standby	X	X	X	X	Zero	Standby	Occ
Remote	X	X	X	X	X	Byp[e]	Standby	X	X	X	X	Not Zero	Bypass	Occ
Remote	X	X	X	X	X	Byp[e]	NUL	Valid	Occ	X	X	X	Occ	Occ
Remote	X	X	X	X	X	Byp[e]	NUL	Valid	Unocc	X	X	Zero	Unocc	Unocc
Remote	X	X	X	X	X	Byp[e]	NUL	Valid	Unocc	X	X	Not Zero	Bypass	Occ
Remote	X	X	X	X	X	Byp[e]	NUL	Invalid	X	Occ	X	X	Occ	Occ
Remote	X	X	X	X	X	Byp[e]	NUL	Invalid	X	Unocc	X	Zero	Unocc	Unocc
Remote	X	X	X	X	X	Byp[e]	NUL	Invalid	X	Unocc	X	Not Zero	Bypass	Occ
Remote	X	X	X	X	X	Byp[e]	NUL	Invalid	X	NUL	Occ	X	Occ	Occ
Remote	X	X	X	X	X	Byp[e]	NUL	Invalid	X	NUL	Unocc	Zero	Unocc	Unocc
Remote	X	X	X	X	X	Byp[e]	NUL	Invalid	X	NUL	Unocc	Not Zero	Bypass	Occ
Remote	X	X	X	X	X	Stdby[e]	X	X	X	X	X	Zero	Standby	Occ
Remote	X	X	X	X	X	Stdby[e]	X	X	X	X	X	Not Zero	Bypass	Occ
Remote	X	X	X	X	X	NUL[e]	Occ	X	X	Occ	X	X	Occ	Occ
Remote	X	X	X	X	X	NUL[e]	Occ	X	X	Unocc	X	Zero	Standby	Occ
Remote	X	X	X	X	X	NUL[e]	Occ	X	X	Unocc	X	Not Zero	Bypass	Occ
Remote	X	X	X	X	X	NUL[e]	Occ	X	X	NUL	Occ	X	Occ	Occ
Remote	X	X	X	X	X	NUL[e]	Occ	X	X	NUL	Unocc	Zero	Standby	Occ
Remote	X	X	X	X	X	NUL[e]	Occ	X	X	NUL	Unocc	Not Zero	Bypass	Occ
Remote	X	X	X	X	X	NUL[e]	Unocc	X	X	X	X	Zero	Unocc	Unocc
Remote	X	X	X	X	X	NUL[e]	Unocc	X	X	X	X	Not Zero	Bypass	Occ
Remote	X	X	X	X	X	NUL[e]	Standby	X	X	X	X	Zero	Standby	Occ
Remote	X	X	X	X	X	NUL[e]	Standby	X	X	X	X	Not Zero	Bypass	Occ
Remote	X	X	X	X	X	NUL[e]	NUL	Valid	Occ	Occ	X	X	Occ	Occ
Remote	X	X	X	X	X	NUL[e]	NUL	Valid	Occ	Unocc	X	Zero	Standby	Occ
Remote	X	X	X	X	X	NUL[e]	NUL	Valid	Occ	Unocc	X	Not Zero	Bypass	Occ
Remote	X	X	X	X	X	NUL[e]	NUL	Valid	Occ	NUL	Occ	X	Occ	Occ
Remote	X	X	X	X	X	NUL[e]	NUL	Valid	Occ	NUL	Unocc	Zero	Standby	Occ
Remote	X	X	X	X	X	NUL[e]	NUL	Valid	Occ	NUL	Unocc	Not Zero	Bypass	Occ
Remote	X	X	X	X	X	NUL[e]	NUL	Valid	Unocc	X	X	Zero	Unocc	Unocc
Remote	X	X	X	X	X	NUL[e]	NUL	Valid	Unocc	X	X	Not Zero	Bypass	Occ
Remote	X	X	X	X	X	NUL[e]	NUL	Invalid	X	Occ	X	X	Occ	Occ
Remote	X	X	X	X	X	NUL[e]	NUL	Invalid	X	Unocc	X	Zero	Unocc	Unocc
Remote	X	X	X	X	X	NUL[e]	NUL	Invalid	X	Unocc	X	Not Zero	Bypass	Occ
Remote	X	X	X	X	X	NUL[e]	NUL	Invalid	X	NUL	Occ	X	Occ	Occ
Remote	X	X	X	X	X	NUL[e]	NUL	Invalid	X	NUL	Unocc	Zero	Unocc	Unocc
Remote	X	X	X	X	X	NUL[e]	NUL	Invalid	X	NUL	Unocc	Not Zero	Bypass	Occ

(a) **X** in any of the table fields denotes any state.
(b) If **nviApplicMode** or **nviHeatCool** equals **HVAC_MRNG_WRMUP**, **HVAC_NIGHT_PURGE**, or **HVAC_PRE_COOL**, each has higher priority than **nviOccManCmd**, **nviOccSchedule**, **nviOccSensor** or any local unit occupancy input. This is because the unit must be in occupied mode to perform the desired functions (such as space pressure control).

(c) There is no time out for **nviOccManCmd**. It is not heartbeated. The value of **nviOccManCmd** is lost when power is lost, **nviOccManCmd = NUL** when power returns. The **nviOccManCmd** enumerations of unoccupied and standby can be bypassed. Pushing the zone sensor module timed override ON button can change the effective occupancy from unoccupied or standby to bypass.

(d) The **nviOccSensor** is *only* SCC. The DAC profile uses the NUL rows in this column.

(e) The bypass timer is set to the value in **nciBypassTime** every time one of the following occurs:
1) Receive nviOccManCmd = bypass
2) Receive timed override ON request from the local zone sensor module
After the bypass timer is set to **nciBypassTime**, it counts down to zero.
The bypass timer is cleared to zero every time one of the following occurs:
1) Receive **nviOccManCmd** = **occupied**, **unoccupied**, **standby**, **NUL**, or **undefined**
2) Receive timed override **CANCEL** request from the local zone sensor module
To disable the network bypass timer, set **nciBypassTime** to zero. This disables the **nviOccManCmd** and **nviOccSchedule OC_BYPASS** enumeration. This *does not* disable the local bypass timer that is used by the zone sensor with timed override button, which is hard-coded to be three hours. However, if **nciBypassTime** is set to zero and either **nviOccManCmd** or **nviOccSchedule** are set to **OC_BYPASS**, the local zone sensor timed override button is disabled. If **nciBypassTime** is set to zero, it does not disable the TOV Request or TOV Cancel Request in **nvoTraneVar7**.

(f) When **nviApplicMode = HVAC_NIGHT_PURGE**, **nviOccSchedule**, and **nviOccSensor** are ignored, **nvoEffectOccup** reports **OC_UNOCCUPIED**, and the human interface reports occupied. This was necessary because all Intellipak DAC products must be in occupied mode to do discharge air control with duct static pressure control.

Timed Override Control Mode

The range for the timed override bypass time is 0 to 240 minutes *(configurable, nciBypassTime)*. The default value for the bypass time is 120 minutes for SCC units and 0 minutes for DAC units.

The space temperature analog input generates timed override **ON** and **Cancel** requests in the following manner. The controller interprets a momentary short *(greater than 3 seconds)* on the space temperature analog input as a timed override **ON** request. The controller always accepts this timed override **ON** request and resets the bypass time. The controller changes to occupied bypass mode only if the controller is in either the unoccupied or occupied standby mode. The controller stays in the occupied bypass mode for the occupied bypass time or until someone presses the Cancel button on the zone sensor.

The controller interprets a momentary fixed resistance *(greater than 3 seconds)* of 1.5 kΩ on the space temperature analog input as a timed override **Cancel** request. The controller accepts the **Cancel** request and sets the bypass time to zero. During occupied bypass mode, the controller uses a **Cancel** request to return the controller to unoccupied mode.

Occupancy data can be shared between controllers that are bound as peers. **ON** and **Cancel** requests are generated by the zone sensor of the master controller. Refer to the section, "Peer-to-peer Communication," p. 92.

Emergency Override Mode

The Tracer LCI-I controller can be placed into emergency override using the communication link. Emergency override allows a building automation system to pressurize, depressurize, or purge the air from a building space. It can also be used to shut down the controller operation of the unit.

The emergency override command influences the controller supply fan, inlet guide vanes, exhaust fan, exhaust dampers, outdoor air damper, heat, occupancy/unoccupancy relay, ventilation override relay, and outdoor air pre-heater state to create the desired condition (refer to Table 119).

Table 119. Emergency override commands

Command	Supply Fan	Inlet Vanes	Exhaust Fan	Exhaust Dampers	Outside Air Damper	Heat	Unoccupied Relay	Ventilation Override Relay	Outside Air Preheat
Pressurize	ON	Open	OFF	Closed	Open	OFF	ON	ON	OFF
Depressurize	OFF	Closed	ON	Open	Closed	OFF	ON	ON	OFF
Purge	ON	Open	ON	Open	Open	OFF	ON	ON	OFF
Shutdown	OFF	Closed	OFF	Closed	Closed	OFF	ON	ON	OFF
Fire	OFF	Closed	OFF	Closed	Closed	OFF	ON	ON	OFF

Setpoint Operation Mode

Stand-alone controllers can use several different setpoint sources: the local zone sensor, night setback panel input, Generic Building Automation System (GBAS) module, or the default (HI keypad) setpoints (nciSetpoints). The controller derives its setpoint and default setpoints (including deadbands between setpoints) from either the local hard wired setpoint input *(if present)* or from its default setpoints.

Peer-to-peer applications can share the heating/cooling setpoint *(communicated from a master to a slave)*. To ensure the peer-to-peer setpoint application results in identical setpoints for each communicating controller, each controller must have exactly the same default setpoints.

Peer-to-peer applications often require the use of one hard wired setpoint to be shared across two or more controllers. This is achieved by wiring the adjustable setpoint *(typically included as a part of the zone sensor module)* to the controller that has been designated as the master. Refer to the section, "Peer-to-peer Communication," p. 92.

Input Duct Static Pressure

The duct static pressure input can either be hard wired or communicated to the controller by means of LonTalk. If both a communicated value and a hard wired duct static pressure value exist, the communicated value has precedence. Similarly, the duct static pressure setpoint can either be configured *(default)* or communicated. If a communicated duct static pressure setpoint value exists, the communicated value has precedence.

Morning or Daytime Warm-Up

If a space temperature input is provided to the controller when configured as CV discharge air control or VAV control, the controller can be configured to use the space temperature to perform morning warm-up and daytime warm-up functions. Morning or daytime warm-up functions allow the controller to automatically change to heating if space temperature is less than the heating setpoint. The daytime warm-up function cannot be initiated through a communicated request.

Discharge Air Temperature Control

In heating mode, the controller creates a supply air temperature according to the configured discharge air heating setpoint or communicated discharge air heating setpoint input. In cooling mode, the controller maintains a supply air temperature according to the configured discharge air cooling setpoint or communicated discharge air cooling setpoint input. If a valid communicated discharge air setpoint exists, the controller uses the communicated value.

Mixed Air and Outdoor Air Temperature Inputs

Temperature inputs such as mixed air temperature or outdoor air temperature aid the ability of the LCI-I to maintain comfort and protect the unit.

General Information

This section provides general information about the following:

- Location identifier
- Power-up sequence
- Peer-to-peer communication

Location Identifier

The Tracer LCI-I includes unit configuration for a location identifier. The maximum length of the location identifier is 30 characters. The identifier can be modified for easy identification of the unit based on its physical location.

Power-up Sequence

When 24 Vac power is initially applied to the Tracer LCI-I and the unit controller, the following sequence occurs (refer to the section, "LED Activity," p. 93):

- Red Service LED and green Status LED blink intermittently.
- Internal unit communications begins *(IPC TXA and RXA LEDs blink)*.
- Green Status LED turns on solid.
- Unit will remain in local *(stand-alone)* control until LonTalk control data is received.

  Note: *The unit must also be changed from LOCAL to BAS/NETWORK (remote) control in the Human Interface (HI) Setup menu. To change remote control:*

  *18.Press the **Setup** menu button on the human interface and then press the **Next**.*

  *19.On the next screen, press the **+** until the unit control is set to BAS/NETWORK.*

  *20.Press the **Enter**.*

- Power-up control wait feature is applied. The controller waits 300 seconds to allow ample time for the communicated control data to arrive. If after 300 seconds, the controller has not received any communicated control data, the unit assumes local *(stand-alone)* operation.
- Normal operation begins.

A service test cannot be initiated until the power-up sequence has completed. Refer to the section, "Service Test," p. 94.

Peer-to-peer Communication

Tracer LCI-I controllers allow peer-to-peer *(or master/slave)* data communication. Data such as space temperature, setpoint, and occupancy can be shared from a master control to a peer control with or without the presence of a Tracer Summit system (refer to Figure 2).

For peer-to-peer applications, the controllers must be bound as peers using the Rover service tool. Refer to the Rover service tool product literature for more information.

Figure 2. Peer-to-peer communication

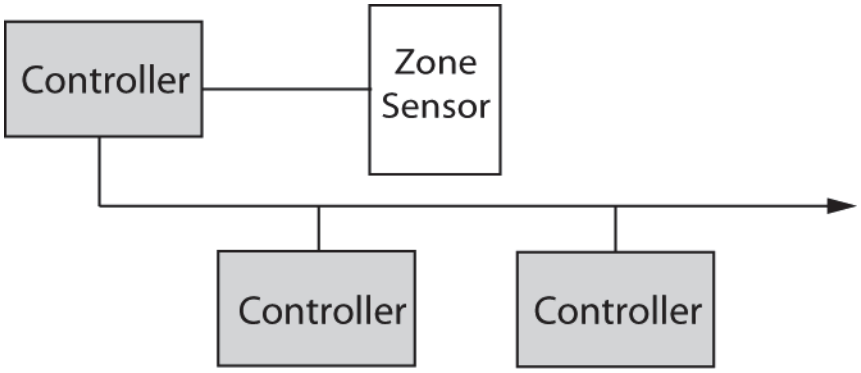

Troubleshooting

This section provides information about the following:

- LED activity
- Service test and input requirements
- Diagnostics

LED Activity

Red Service LED

Activity	Description
LED OFF continuously after power is applied.	Normal operation.
LED ON continuously, even when power is first applied.	Service button[(a)] is being pushed or there is controller failure.
LED flashes approximately once every second.	LCI-I is un-configured. Use Rover Service tool to restore the unit to Normal operation.[(b)]

(a) The Service button (*or Service Pin*) is located on the left center board edge of the Tracer LCI-I controller. It can be used to install the controller in a communication network. Pressing the Service button will cause the LCI-I controller to broadcast its Neuron ID and Program ID. Refer to Rover Service tool product literature for more information.

(b) If the Service button is held down for more than 15 seconds, the controller will un-install from the communication network (*un-configured state*) and will no longer control the unit. This mode is indicated by the red service LED flashing once every second. Refer to the previous section on Red service LED for more information. Use the Rover service tool or another network management tool to restore the unit to normal operation. Refer to the Rover product literature for more information.

Green Status LED

Activity	Description
LED ON continuously.	Power on, normal operation.
LED blinks once (¼ second ON and 2 seconds OFF continuously.	Controller has lost IPC communication for more than 3 minutes.
LED blinks twice (¼ second ON, ¼ OFF, ¼ second ON, 2-½ seconds OFF continuously.	Controller needs application code or is waiting for application code to download.
LED blinks (¼ second ON, ¼ second OFF for 10 minutes.	Wink mode[(a)].

(a) Wink mode identifies a controller. By sending a request from Rover Service tool, the controller is requested to wink (*blink **ON** and **OFF** as a notification that the controller received the signal*). The green LED blinks (*1/4 second **ON**, 1/4 second **OFF** for 10 seconds*) during Wink mode. This Wink response is available when the LCI-I node is either configured or not configured.

Yellow Comm LED

Activity	Description
LED OFF continuously.	Controller not detecting communication (normal for standalone applications).
LED blinks or flickers.	Controller detecting communication (normal for communicating applications, including data sharing).
LED ON continuously.	Abnormal conditional or extreme high traffic on the link.
LED does not blink.	Controller is transmitting communication data.

Yellow IPC RXA (Receives)/IPC TXA (Transmits) LED

Activity	Description
LED OFF continuously.	Controller not detecting communication (abnormal for any application).
LED blinks or flickers.	Controller receiving/transmitting communication (normal for any application).
LED ON continuously.	Abnormal conditional or controller failure.
LED does not blink.	Controller is receiving/transmitting communication data.

Service Test and Input Requirements

Service Test

Service test mode allows the operator or technician to designate the state of various unit components, which may be turned **ON** or **OFF** or set to a percent and the start time delay for the test. The service test can be initiated only at the local (unit-mounted) human interface.

Required Inputs for Unit Operation

The following table lists the required locally wired sensor or communicated inputs for each listed control function. If any one of the sensors does not exist, the controller operates the control function.

Table 120.Required Sensors

Control Function	Sensor(s) Required To Be Present: Wired Sensor or Communicated Value	Controller Operation If Input Is not Present
VAV control	• Duct static pressure • Discharge air temperature	• Diagnostic shutdown • Diagnostic shutdown
Discharge air temperature	• Discharge air temperature	• Diagnostic shutdown
Space temperature control	• Space temperature • Discharge air temperature	• Diagnostic shutdown • Diagnostic
Economizer operation	• Outdoor air temperature	• Economizer disabled

Diagnostics

Three different types of diagnostics are generated by the LCI-I controller that are used to troubleshoot abnormal unit operation.

Table 121.Diagnostics

Diagnostic	Description
Alarm	The controller shuts down the unit to protect the unit and deter possible equipment damage or the controller cannot operate until the diagnostic condition is corrected.
Service required	The controller disables only sequences of operation and attempts to maintain unit operation. For example, if the outdoor air temperature fails or is not wired, the LCI-I controller disables the economizer operation.
Informational	This type of diagnostic *does not* affect controller operation.

General Notes

- When a local temperature/pressure sensor or setpoint has failed after being valid, the controller generates a diagnostic to indicate the sensor or setpoint loss condition. The controller automatically clears the diagnostic once a valid sensor or setpoint value is present (non-latching diagnostic).

- If the local outdoor air temperature sensor fails and a communicated value is not present, the outdoor air damper is opened to minimum position and economizer operation is disabled.
- A space temperature failure diagnostic disables morning and daytime warm-up sequence of operation when the controller is configured for constant-volume discharge air control or VAV control.
- Some diagnostic messages can be configured as a service required or critical alarm using Tracer Summit or Rover service tool.
- See nvoAlarmMessage for a list of diagnostic messages.

Translating Multiple Diagnostics

The controller senses and records each diagnostic independently of other diagnostics. It is possible to have multiple diagnostics present simultaneously. The diagnostics are reported in the order they occur. Non-latching diagnostics automatically reset when the input is present and valid.

Resetting Diagnostics

A reset clears any latching diagnostics and allows the controller to try to run the unit normally. If the latching condition is still present, the controller immediately shuts down the unit. A reset will reset a unit that is running normally and is similar to cycling power to the unit. Unit diagnostics can be reset from the local or remote human interface by cycling power to the unit or by sending a request through the LCI-I controller.

Unit diagnostics can be reset in the following ways:

21. Using the local human interface.
22. Using the remote human interface.
23. By cycling power to the controller.

    When 24 Vac power is cycled to the controller, the unit cycles through a power-up sequence. By default, the controller attempts to reset all diagnostics at power up. Diagnostics present at power-up, and those that occur after power-up, are handled according to the defined unit diagnostics sequences (refer to Table 121).
24. By sending a reset request through the LCI-I controller via nviRequest enumeration 10 to the correct DAC/SCC object or node.

Appendix

Refer to the following tables about the following:

- Effects of modes on unit operation
- Determining heat/cool mode, fan request, and run request
- Arbitration logic

Table 122.Effect of Application Mode and Heat/Cool Mode on unit operation[a]

Input													Output		
VAV Box Cmd	Platform ID	Unit_State	Main State	Primary Control State	nviApplicMode (SCC/DAC)	nviHeatCool (SCC)	Supply Fan Status	Gas Heat Type	Drying Mode	Heat Type	System Control	Heat/Cool Mode	nvoHeatCool nvoUnitStatus.mode (DAC/SCC)	nvoApplicMode (only DAC)	Unit Operation[b]1
Open	X	X	X	X	X	X	X	X	X	X	VAV with IGV or VAV w/o IGV	X	HVAC_MAX_HEAT	HVAC_MAX_HEAT	Fan Enabled Heat Enabled Cooling Enabled Damper Enabled
X	X	Reset	X	X	X	X	X	X	X	X	X	X	HVAC_OFF	HVAC_AUTO	Fan Disabled Heating Disabled Cooling Disabled Damper Disabled
X	X	Check config	X	X	X	X	X	X	X	X	X	X	HVAC_NUL	HVAC_AUTO	Fan Disabled Heating Disabled Cooling Disabled Damper Disabled
X	X	Emerg stop	X	X	X	X	X	X	X	X	X	X	HVAC_OFF	HVAC_AUTO	Fan Disabled Heating Disabled Cooling Disabled Damper Disabled
X	X	Mfg override	X	X	X	X	X	X	X	X	X	X	HVAC_TEST	HVAC_AUTO	Fan Disabled Heating Disabled Cooling Disabled Damper Disabled
X	X	Main	Reset	X	X	X	X	X	X	X	X	X	HVAC_OFF	HVAC_AUTO	Fan Disabled Heating Disabled Cooling Disabled Damper Disabled
X	X	Main	Unused	X	X	X	X	X	X	X	X	X	HVAC_NUL	HVAC_NUL	Fan Disabled Heating Disabled Cooling Disabled Damper Disabled
X	X	Main	Service test	X	X	X	X	X	X	X	X	X	HVAC_MAX_HEAT	HVAC_MAX_HEAT	Dependent on test Configuration
X	X	Main	Ventilation override	X	X	X	Not requested	X	X	X	X	X	HVAC_OFF	HVAC_AUTO	Fan Enabled Heat Enabled Cooling Enabled Damper Enabled
X	X	Main	Ventilation override	X	X	X	X	Staged	X	Gas	VAV with IGV or VAV w/o IGV	Heat	HVAC_MAX_HEAT	HVAC_MAX_HEAT	Fan Enabled Heat Enabled Cooling Enabled Damper Enabled
X	X	Main	Ventilation override	X	X	X	X	Staged	X	Gas	CV	Heat	HVAC_HEAT	not applicable	Fan Enabled Heat Enabled Cooling Enabled Damper Enabled
X	X	Main	Ventilation override	X	X	X	X	Modulated	X	Gas	X	Heat	HVAC_HEAT	HVAC_HEAT	Fan Enabled Heat Enabled Cooling Enabled Damper Enabled
X	X	Main	Ventilation override	X	X	X	X	X	X	Electric	VAV with IGV orVAV w/o IGV	Heat	HVAC_MAX_HEAT	HVAC_MAX_HEAT	Fan Enabled Heat Enabled Cooling Enabled Damper Enabled
X	X	Main	Ventilation override	X	X	X	X	X	X	Electric	1=CV	Heat	HVAC_HEAT	not applicable	Fan Enabled Heat Enabled Cooling Enabled Damper Enabled
X	X	Main	Ventilation override	X	X	X	X	X	X	Hydronic external heat or heat pump	X	Heat	HVAC_HEAT	HVAC_HEAT	Fan Enabled Heat Enabled Cooling Enabled Damper Enabled
X	X	Main	Primary control	start delay	X	X	X	X	X	X	X	X	HVAC_OFF	HVAC_AUTO	Fan Disabled Heating Disabled Cooling Disabled Damper Disabled
X	X	Main	Primary controlP	unit stop	X	X	X	X	X	X	X	X	HVAC_OFF	HVAC_AUTO	Fan Disabled Heating Disabled Cooling Disabled Damper Disabled

Table 122.Effect of Application Mode and Heat/Cool Mode on unit operation[a] (continued)

Input													Output		
VAV Box Cmd	Platform ID	Unit_State	Main State	Primary Control State	nviApplicMode (SCC/DAC)	nviHeatCool (SCC)	Supply Fan Status	Gas Heat Type	Drying Mode	Heat Type	System Control	Heat/Cool Mode	nvoHeatCool nvoUnitStatus.mode (DAC/SCC)	nvoApplicMode (only DAC)	Unit Operation[b] 1
X	X	Main	Primary control	mode off	X	X	X	X	X	X	X	X	HVAC_OFF	HVAC_AUTO	Fan Disabled Heating Disabled Cooling Disabled Damper Disabled
X	X	X	Primary control	X	MWU	X	X	X	X	X	CV	X	HVAC_MRNG_WRMUP [2]	not applicable	Fan Enabled Heating Enabled Cooling Disabled Damper Disabled
X	X	X	Primary control	X	MWU	X	X	X	X	X	VAV w/o IGV	X	HVAC_MRNG_WRMUP [2]	HVAC_MRNG_WRMUP [2]	Fan Enabled Heating Enabled Cooling Disabled Damper Disabled
X	X	X	Primary control	X	MWU	X	X	Staged	X	Gas	VAV w/IGV	X	HVAC_MAX_HEAT	HVAC_MAX_HEAT	Fan Enabled Heating Enabled Cooling Disabled Damper Disabled
X	X	X	Primary control	X	MWU	X	X	Modulating	X	Gas	VAV w/IGV	X	HVAC_MRNG_WRMUP	HVAC_MRNG_WRMUP	Fan Enabled Heating Enabled Cooling Disabled Damper Disabled
X	X	X	Primary control	X	MWU	X	X	X	X	Hydronic external heat or heat pump	VAV w/IGV	X	HVAC_MRNG_WRMUP	HVAC_MRNG_WRMUP	Fan Enabled Heating Enabled Cooling Disabled Damper Disabled
X	IPak I	X	Primary control	X	MWU	X	X	X	X	Electric	VAV w/IGV	X	HVAC_MRNG_WRMUP [1]	HVAC_MRNG_WRMUP [1]	Fan Enabled Heating Enabled Cooling Disabled Damper Disabled
X	IPak II	X	Primary control	X	MWU	X	X	X	X	Electric	VAV w/IGV	X	HVAC_MRNG_WRMUP [1]	HVAC_MRNG_WRMUP [1]	Fan Enabled Heating Enabled Cooling Disabled Damper Disabled
X	X	X	Primary control	X	Purge	X	X	X	X	X	X	X	HVAC_NIGHT_PURGE	HVAC_NIGHT_PURGE	Fan Enabled Heating Disabled Cooling Disabled Damper Disabled
X	X	X	Primary control	X	Pre-Cool	X	X	X	X	X	X	X	HVAC_PRE_COOL	HVAC_PRE_COOL	Fan Enabled Heating Disabled Cooling Enabled Damper Disabled
X	X	X	Primary control	X	Auto or NUL	MWU	X	X	X	X	CV	X	HVAC_MRNG_WRMUP	Not applicable	Fan Enabled Heating Enabled Cooling Disabled Damper Disabled
X	X	X	Primary control	X	Auto or NUL	Purge	X	X	X	X	CV	X	HVAC_NIGHT_PURGE	Not applicable	Fan Enabled Heating Disabled Cooling Disabled Damper Disabled
X	X	X	Primary control	X	Auto or NUL	Pre-Cool	X	X	X	X	CV	X	HVAC_PRE_COOL	Not applicable	Fan Enabled Heating Disabled Cooling Enabled Damper Disabled
X	X	Main	Primary control	Not Start Delay, Unit Stop, or Mode Off	Fan Only	X	X	X	X	X	X	X	HVAC_FAN_ONLY	HVAC_AUTO	Fan Enabled Heating Disabled Cooling Disabled Damper Disabled
X	X	Main	Primary control	Not Start Delay, Unit Stop, or Mode Off	Auto or NUL	Fan only	X	X	X	X	X	X	HVAC_FAN_ONLY	Not applicable	Fan Enabled Heating Disabled Cooling Disabled Damper Disabled

Table 122.Effect of Application Mode and Heat/Cool Mode on unit operation[a] (continued)

Input													Output		
VAV Box Cmd	Platform ID	Unit_State	Main State	Primary Control State	nviApplicMode (SCC/DAC)	nviHeatCool (SCC)	Supply Fan Status	Gas Heat Type	Drying Mode	Heat Type	System Control	Heat/Cool Mode	nvoHeatCool nvoUnitStatus.mode (DAC/SCC)	nvoApplicMode (only DAC)	Unit Operation[b] 1
X	X	Main	Primary control	mwu	X	X	X	X	X	X	CV	X	HVAC_MRNG_WRMUP	Not applicable	Fan Enabled Heating Enabled Cooling Disabled Damper Disabled
X	X	Main	Primary control	mwu	X	X	X	X	X	X	VAV w/IGV or VAV w/o IGV	X	HVAC_MRNG_WRMUP	Not applicable	Fan Enabled Heating Enabled Cooling Disabled Damper Disabled
X	X	Main	Primary control	dwu	X	X	X	X	X	X	VAV w/IGV or VAV w/o IGV	X	HVAC_MAX_HEAT	HVAC_MAX_HEAT	Fan Enabled Heating Enabled Cooling Disabled Damper Enabled
X	X	Main	Primary control	sys-tem diag	X	X	X	X	X	X	X	X	HVAC_OFF	HVAC_AUTO	Fan Disabled Heating Disabled Cooling Disabled Damper Disabled
X	X	Main	Primary control	Unoc-cupied	X	X	Not requested	X	X	X	X	X	HVAC_OFF	HVAC_AUTO	Fan Disabled Heating Disabled Cooling Disabled Damper Disabled
X	X	Main	Primary control	Unoc-cupied	X	X	X	X	Drying	X	CV	X	HVAC_DEHUMID	HVAC_DEHUMID	Fan Enabled Heating Enabled Cooling Enabled Damper Enabled
X	X	Main	Primary control	Unoc-cupied	X	X	X	X	X	X	CV	Heat	HVAC_HEAT	Not applicable	Fan Enabled Heating Enabled Cooling Enabled Damper Enabled
X	X	Main	Primary control	Unoc-cupied	X	X	X	X	X	X	CV	Cool	HVAC_COOL	Not applicable	Fan Enabled Heating Enabled Cooling Enabled Damper Enabled
X	X	Main	Primary control	Unoc-cupied	X	X	X	X	X	X	VAV w/IGV or VAV w/o IGV	X	HVAC_MAX_HEAT	HVAC_MAX_HEAT	Fan Enabled Heating Enabled Cooling Enabled Damper Enabled
X	X	Main	Primary control	VAV Occu-pied	X	X	X	X	Drying	X	X	X	HVAC_MAX_HEAT	HVAC_MAX_HEAT	Fan Enabled Heating Enabled Cooling Enabled Damper Enabled
X	X	Main	Primary control	VAV Occu-pied	X	X	X	staged	X	Gas	X	Heat	HVAC_MAX_HEAT	HVAC_MAX_HEAT	Fan Enabled Heating Enabled Cooling Enabled Damper Enabled
X	X	Main	Primary control	VAV Occu-pied	X	X	X	modu-lated	X	Gas	X	Heat	HVAC_HEAT	HVAC_HEAT	Fan Enabled Heating Enabled Cooling Enabled Damper Enabled
X	X	Main	Primary control	VAV Occu-pied	X	X	X	X	X	Electric	X	Heat	HVAC_MAX_HEAT	HVAC_MAX_HEAT	Fan Enabled Heating Enabled Cooling Enabled Damper Enabled
X	X	Main	Primary control	VAV Occu-pied	X	X	X	X	X	hydronic external heat or heat pump	X	Heat	HVAC_HEAT	HVAC_HEAT	Fan Enabled Heating Enabled Cooling Enabled Damper Enabled
X	X	Main	Primary control	VAV Ooccu-pied	X	X	X	X	X	X	X	Cool	HVAC_COOL	HVAC_COOL	Fan Enabled Heating Enabled Cooling Enabled Damper Enabled
X	X	Main	Primary control	CV Occu-pied	X	X	Not Requested	X	X	X	X	X	HVAC_OFF	Not applicable	Fan Disabled Heating Disabled Cooling Disabled Damper Disabled
X	X	Main	Primary control	CV Occu-pied	X	X	X	X	drying	X	X	X	HVAC_DEHUMID	not applicable	Fan Enabled Heating Enabled Cooling Enabled Damper Enabled

Table 122.Effect of Application Mode and Heat/Cool Mode on unit operation[a] (continued)

Input													Output		
VAV Box Cmd	Platform ID	Unit_State	Main State	Primary Control State	nviApplicMode (SCC/DAC)	nviHeatCool (SCC)	Supply Fan Status	Gas Heat Type	Drying Mode	Heat Type	System Control	Heat/Cool Mode	nvoHeatCool nvoUnitStatus.mode (DAC/SCC)	nvoApplicMode (only DAC)	Unit Operation[b] 1
X	X	Main	Primary control	CV Occu-pied	X	X	X	Staged	X	Gas	X	Heat	HVAC_HEAT	not applicable	Fan Enabled Heating Enabled Cooling Enabled Damper Enabled
X	X	Main	Primary control	CV Occu-pied	X	X	X	Modu-lated	X	Gas	X	Heat	HVAC_HEAT	not applicable	Fan Enabled Heating Enabled Cooling Enabled Damper Enabled
X	X	Main	Primary control	CV Ocu-pied	X	X	X	X	X	Electric	X	Heat	HVAC_HEAT	not applicable	Fan Enabled Heating Enabled Cooling Enabled Damper Enabled
X	X	Main	primary controlP	CV Occu-pied	X	X	X	X	X	Hydronic external heat or heat pump	X	Heat	HVAC_HEAT	not applicable	Fan Enabled Heating Enabled Cooling Enabled Damper Enabled
X	X	Main	Primary control	CV Occu-pied	X	X	X	X	X	X	X	Cool	HVAC_COOL	not applicable	Fan Enabled Heating Enabled Cooling Enabled Damper Enabled

(a) **X** in any of the table fields denotes any state.
(b) The outputs in the **Unit Operation** column are based on the inputs of **nviApplicMode** and **nviHeatCool**. Though the output may say Enabled, the actual function may be disabled by various **Ventilation Override Modes** or lockout sources (for example, low ambient lockout, supply air low limit, fan proving, demand limit).

General Notes for Table 123, p. 102.

- Refer to Table 124, p. 106 for more information on determining local fan mode arbitration.
- Per the SCC profile, nviApplicMode overrides nviHeatCool, unless nviApplicMode is HVAC_AUTO, HVAC_TEST, or HVAC_NUL *(for IntelliPak units, HVAC_TEST and HVAC_NUL are treated as HVAC_AUTO)*. If nviApplicMode is HVAC_AUTO, then nviHeatCool determines the effective mode of the unit.
- nviApplicMode *(and/or nviHeatCool)* with an unsupported enumeration *(other than 0, 6 or 9 for FAU and other than 0, 1, 3, 6 or 9 for RT/CSC)* is treated as HVAC_AUTO.

Table 123.Determination of Heat/Cool Mode, Fan Request, and Run Request

Input										Output			
Power up Control Wait Time	Local Switch Enable	Local Fan Mode	Unit Type	Profile	nviApplicMode	nviHeatCool (SCC)	nvoHeatCool	Fan Config Cooling	Fan Config Heating	Local/ Remote Heat/Cool Arbitration	Remote Heat/ Cool Request	Remote Auto/ Stop Request	Remote Fan Mode Request
>0	X	X	X	X	X	X	X	X	X	Local	Heat	Stop	Auto
0	Enable	Auto	FAU	DAC	AUTO	N/A	X	N/A	N/A	Local	Heat	Auto	Auto
0	Enable	Auto	FAU	DAC	OFF	N/A	X	N/A	N/A	Local	Heat	Stop	Auto
0	Enable	Auto	FAU	DAC	FAN_ONLY[a]	N/A	X	N/A	N/A	Local	Heat	Auto	Auto
0	Enable	Auto	FAU	DAC	X	N/A	X	N/A	N/A	Local	Heat	Auto	Auto
0	Enable	Auto	RT/CSC	DAC	AUTO	N/A	X	N/A	N/A	Local	Heat	Auto	Auto
0	Enable	Auto	RT/CSC	DAC	Heat	N/A	X	N/A	N/A	Remote	Heat	Auto	Auto
0	Enable	Auto	RT/CSC	DAC	MWU	N/A	X	N/A	N/A	Remote	Heat	Auto	On
0	Enable	Auto	RT/CSC	DAC	COOL	N/A	X	N/A	N/A	Remote	Cool	Auto	Auto
0	Enable	Auto	RT/CSC	DAC	PURGE	N/A	X	N/A	N/A	Remote	Cool	Auto	On
0	Enable	Auto	RT/CSC	DAC	PRECOOL	N/A	X	N/A	N/A	Remote	Cool	Auto	On
0	Enable	Auto	RT/CSC	DAC	OFF	N/A	X	N/A	N/A	Local	Heat	Stop	Auto
0	Enable	Auto	RT/CSC	DAC	FAN_ONLY[a]	N/A	X	N/A	N/A	Local	Heat	Auto	Auto
0	Enable	Auto	RT/CSC	DAC	X	N/A	X	N/A	N/A	Local	Heat	Auto	Auto
0	Enable	Auto	RT/CSC	SCC	AUTO	Auto	X	X	X	Local	Heat	Auto	Auto
0	Enable	Auto	RT/CSC	SCC	AUTO	Heat or MAX HT	X	X	X	Remote	Heat	Auto	Auto
0	Enable	Auto	RT/CSC	SCC	AUTO	MWU	X	X	X	Remote	Heat	Auto	On
0	Enable	Auto	RT/CSC	SCC	AUTO	COOL	X	X	X	Remote	Cool	Auto	Auto
0	Enable	Auto	RT/CSC	SCC	AUTO	PURGE	X	X	X	Remote	Cool	Auto	On
0	Enable	Auto	RT/CSC	SCC	AUTO	PRECOOL	X	X	X	Remote	Cool	Auto	On
0	Enable	Auto	RT/CSC	SCC	AUTO	OFF	X	X	X	Local	Heat	Stop	Auto
0	Enable	Auto	RT/CSC	SCC	AUTO	FAN_ONLY[a]	X	X	X	Local	Heat	Auto	Auto
0	Enable	Auto	RT/CSC	SCC	AUTO	X	X	X	X	Local	Heat	Auto	Auto
0	Enable	Auto	RT/CSC	SCC	HEAT	X	X	X	X	Remote	Heat	Auto	Auto
0	Enable	Auto	RT/CSC	SCC	MWU	X	X	X	X	Remote	Heat	Auto	On
0	Enable	Auto	RT/CSC	SCC	COOL	X	X	X	X	Remote	Cool	Auto	Auto
0	Enable	Auto	RT/CSC	SCC	PURGE	X	X	X	X	Remote	Cool	Auto	On
0	Enable	Auto	RT/CSC	SCC	PRECOOL	X	X	X	X	Remote	Cool	Auto	On
0	Enable	Auto	RT/CSC	SCC	OFF	X	X	X	X	Local	Heat	Stop	Auto
0	Enable	Auto	RT/CSC	SCC	FAN_ONLY[a]	X	X	X	X	Local	Heat	Auto	Auto
0	Enable	Auto	RT/CSC	SCC	X	Auto	X	X	X	Local	Heat	Auto	Auto
0	Enable	Auto	RT/CSC	SCC	X	Heat or MAX HT	X	X	X	Remote	Heat	Auto	Auto
0	Enable	Auto	RT/CSC	SCC	X	MWU	X	X	X	Remote	Heat	Auto	On
0	Enable	Auto	RT/CSC	SCC	X	COOL	X	X	X	Remote	Cool	Auto	Auto
0	Enable	Auto	RT/CSC	SCC	X	PURGE	X	X	X	Remote	Cool	Auto	On
0	Enable	Auto	RT/CSC	SCC	X	PRECOOL	X	X	X	Remote	Cool	Auto	On
0	Enable	Auto	RT/CSC	SCC	X	OFF	X	X	X	Local	Heat	Stop	Auto
0	Enable	Auto	RT/CSC	SCC	X	FAN_ONLY[4]	X	X	X	Local	Heat	Auto	Auto
0	Enable	Auto	RT/CSC	SCC	X	X	X	X	X	Local	Heat	Auto	Auto
0	Enable	On	FAU	DAC	AUTO	N/A	X	N/A	N/A	Local	Heat	Auto	On
0	Enable	On	FAU	DAC	OFF	N/A	X	N/A	N/A	Local	Heat	Stop	On

Table 123.Determination of Heat/Cool Mode, Fan Request, and Run Request (continued)

Input										Output			
Power up Control Wait Time	Local Switch Enable	Local Fan Mode	Unit Type	Profile	nviApplicMode	nviHeatCool (SCC)	nvoHeatCool	Fan Config Cooling	Fan Config Heating	Local/ Remote Heat/Cool Arbitration	Remote Heat/ Cool Request	Remote Auto/ Stop Request	Remote Fan Mode Request
0	Enable	On	FAU	DAC	FAN_ONLY[a]	N/A	X	N/A	N/A	Local	Heat	Auto	On
0	Enable	On	FAU	DAC	X	N/A	X	N/A	N/A	Local	Heat	Auto	On
0	Enable	On	RT/CSC	SCC	AUTO	AUTO	X	X	X	Local	Heat	Auto	On
0	Enable	On	RT/CSC	SCC	AUTO	Heat or MAX HT	X	X	X	Remote	Heat	Auto	On
0	Enable	On	RT/CSC	SCC	AUTO	MWU	X	X	X	Remote	Heat	Auto	On
0	Enable	On	RT/CSC	SCC	AUTO	COOL	X	X	X	Remote	Cool	Auto	On
0	Enable	On	RT/CSC	SCC	AUTO	PURGE	X	X	X	Remote	Cool	Auto	On
0	Enable	On	RT/CSC	SCC	AUTO	PRECOOL	X	X	X	Remote	Cool	Auto	On
0	Enable	On	RT/CSC	SCC	AUTO	OFF	X	X	X	Local	Heat	Stop	On
0	Enable	On	RT/CSC	SCC	AUTO	FAN_ONLY[a]	X	X	X	Local	Heat	Auto	On
0	Enable	On	RT/CSC	SCC	AUTO	X	X	X	X	Local	Heat	Auto	On
0	Enable	On	RT/CSC	SCC	Heat	X	X	X	X	Remote	Heat	Auto	On
0	Enable	On	RT/CSC	SCC	MWU	X	X	X	X	Remote	Heat	Auto	On
0	Enable	On	RT/CSC	SCC	COOL	X	X	X	X	Remote	Cool	Auto	On
0	Enable	On	RT/CSC	SCC	PURGE	X	X	X	X	Remote	Cool	Auto	On
0	Enable	On	RT/CSC	SCC	PRECOOL	X	X	X	X	Remote	Cool	Auto	On
0	Enable	On	RT/CSC	SCC	OFF	X	X	X	X	Local	Heat	Stop	On
0	Enable	On	RT/CSC	SCC	FAN_ONLY[a]	X	X	X	X	Local	Heat	Auto	On
0	Enable	On	RT/CSC	SCC	X	X	X	X	X	Local	Heat	Auto	On
0	Disable	X	FAU	DAC	AUTO	N/A	X	N/A	N/A	Local	Heat	Auto	Auto
0	Disable	X	FAU	DAC	OFF	N/A	X	N/A	N/A	Local	Heat	Stop	Auto
0	Disable	X	FAU	DAC	FAN_ONLY[a]	N/A	X	N/A	N/A	Local	Heat	Auto	Auto
0	Disable	X	FAU	DAC	X	N/A	X	N/A	N/A	Local	Heat	Auto	Auto
0	Disable	X	RT/CSC	DAC	AUTO	N/A	X	N/A	N/A	Local	Heat	Auto	Auto
0	Disable	X	RT/CSC	DAC	HEAT	N/A	X	N/A	N/A	Remote	Heat	Auto	Auto
0	Disable	X	RT/CSC	DAC	MWU	N/A	X	N/A	N/A	Remote	Heat	Auto	On
0	Disable	X	RT/CSC	DAC	COOL	N/A	X	N/A	N/A	Remote	Cool	Auto	Auto
0	Disable	X	RT/CSC	DAC	PURGE	N/A	X	N/A	N/A	Remote	Cool	Auto	On
0	Disable	X	RT/CSC	DAC	PRECOOL	N/A	X	N/A	N/A	Remote	Cool	Auto	On
0	Disable	X	RT/CSC	DAC	OFF	N/A	X	N/A	N/A	Local	Heat	Stop	Auto
0	Disable	X	RT/CSC	DAC	FAN_ONLY[a]	N/A	X	N/A	N/A	Local	Heat	Auto	Auto
0	Disable	X	RT/CSC	DAC	X	N/A	X	N/A	N/A	Local	Heat	Auto	Auto
0	Disable	X	RT/CSC	SCC	AUTO	AUTO	Heat or MWU or Max HT	X	Cycling	Local	Heat	Auto	Auto
0	Disable	X	RT/CSC	SCC	AUTO	AUTO	Heat or MWU or Max HT	X	Cont	Local	Heat	Auto	OnOn
0	Disable	X	RT/CSC	SCC	AUTO	AUTO	Cool	Cycling	X	local	Heat	Auto	Auto
0	Disable	X	RT/CSC	SCC	AUTO	AUTO	Cool	Cont	X	Local	Heat	Auto	On
0	Disable	X	RT/CSC	SCC	AUTO	AUTO	purge	X	X	Remote	Cool	Auto	On
0	Disable	X	RT/CSC	SCC	AUTO	AUTO	Precool	X	X	Remote	Cool	Auto	On
0	Disable	X	RT/CSC	SCC	AUTO	AUTO	Off or test or nul	X	X	Local	Heat	Auto	Auto

Table 123.Determination of Heat/Cool Mode, Fan Request, and Run Request (continued)

Input										Output			
Power up Control Wait Time	Local Switch Enable	Local Fan Mode	Unit Type	Profile	nviApplicMode	nviHeatCool (SCC)	nvoHeatCool	Fan Config Cooling	Fan Config Heating	Local/ Remote Heat/Cool Arbitration	Remote Heat/ Cool Request	Remote Auto/ Stop Request	Remote Fan Mode Request
0	Disable	X	RT/CSC	SCC	AUTO	AUTO	FAN_ONLY[a]	X	X	Local	Heat	Auto	Auto
0	Disable	X	RT/CSC	SCC	AUTO	Heat or MAX HT	X	X	Cycling	Remote	Heat	Auto	Auto
0	Disable	X	RT/CSC	SCC	AUTO	Heat or MAX HT	X	X	Cont	Remote	Heat	Auto	On
0	Disable	X	RT/CSC	SCC	AUTO	MWU	X	X	X	Remote	Heat	Auto	On
0	Disable	X	RT/CSC	SCC	AUTO	COOL	X	Cycling	X	Remote	Cool	Auto	Auto
0	Disable	X	RT/CSC	SCC	AUTO	COOL	X	Cont	X	Remote	Cool	Auto	On
0	Disable	X	RT/CSC	SCC	AUTO	PURGE	X	X	X	Remote	Cool	Auto	On
0	Disable	X	RT/CSC	SCC	AUTO	PRECOOL	X	X	X	Remote	Cool	Auto	On
0	Disable	X	RT/CSC	SCC	AUTO	OFF	X	X	X	Local	Heat	Stop	Auto
0	Disable	X	RT/CSC	SCC	AUTO	FAN_ONLY[a]	Heat or MWU or Max HT	X	Cycling	Local	Heat	Auto	Auto
0	Disable	X	RT/CSC	SCC	AUTO	FAN_ONLY[a]	Heat or MWU or Max HT	X	Cont	Local	Heat	Auto	On
0	Disable	X	RT/CSC	SCC	AUTO	FAN_ONLY[a]	Cool	Cycling	X	Local	Heat	Auto	Auto
0	Disable	X	RT/CSC	SCC	AUTO	FAN_ONLY[a]	Cool	Cont	X	Local	Heat	Auto	On
0	Disable	X	RT/CSC	SCC	AUTO	FAN_ONLY[a]	Purge	X	X	Remote	Cool	Auto	On
0	Disable	X	RT/CSC	SCC	AUTO	FAN_ONLY[a]	Precool	X	X	Remote	Cool	Auto	On
0	Disable	X	RT/CSC	SCC	AUTO	FAN_ONLY[a]	Off or test or nul	X	X	Local	Heat	Auto	Auto
0	Disable	X	RT/CSC	SCC	AUTO	FAN_ONLY[a]	Fan only	X	X	Local	Heat	Auto	Auto
0	Disable	X	RT/CSC	SCC	AUTO	X	Heat or MWU or Max HT	X	Cycling	Local	Heat	Auto	Auto
0	Disable	X	RT/CSC	SCC	AUTO	X	Heat or MWU or Max HT	X	Cont	Local	Heat	Auto	On
0	Disable	X	RT/CSC	SCC	AUTO	X	Cool	Cycling	X	Local	Heat	Auto	Auto
0	Disable	X	RT/CSC	SCC	AUTO	X	Cool	Cont	X	Local	Heat	Auto	On
0	Disable	X	RT/CSC	SCC	AUTO	X	Purge	X	X	Remote	Cool	Auto	On
0	Disable	X	RT/CSC	SCC	AUTO	X	Precool	X	X	Remote	Cool	Auto	On
0	Disable	X	RT/CSC	SCC	AUTO	X	Off or test or nul	X	X	Local	Heat	Auto	Auto
0	Disable	X	RT/CSC	SCC	AUTO	X	Fan only	X	X	Local	Heat	Auto	Auto
0	Disable	X	RT/CSC	SCC	HEAT	X	X	X	Cycling	Remote	Heat	Auto	Auto
0	Disable	X	RT/CSC	SCC	HEAT	X	X	X	Cont	Remote	Heat	Auto	On
0	Disable	X	RT/CSC	SCC	MWU	X	X	X	X	Remote	Heat	Auto	On
0	Disable	X	RT/CSC	SCC	COOL	X	X	Cycling	X	Remote	Cool	Auto	Auto
0	Disable	X	RT/CSC	SCC	COOL	X	X	Cont	X	Remote	Cool	Auto	On
0	Disable	X	RT/CSC	SCC	PURGE	X	X	X	X	Remote	Cool	Auto	On
0	Disable	X	RT/CSC	SCC	PRECOOL	X	X	X	X	Remote	Cool	Auto	On
0	Disable	X	RT/CSC	SCC	OFF	X	X	X	X	Local	Heat	Stop	Auto
0	Disable	X	RT/CSC	SCC	FAN_ONLY[a]	X	Heat or MWU or Max HT	X	Cycling	Local	Heat	Auto	Auto

Table 123.Determination of Heat/Cool Mode, Fan Request, and Run Request (continued)

Input										Output			
Power up Control Wait Time	Local Switch Enable	Local Fan Mode	Unit Type	Profile	nviApplicMode	nviHeatCool (SCC)	nvoHeatCool	Fan Config Cooling	Fan Config Heating	Local/ Remote Heat/Cool Arbitration	Remote Heat/ Cool Request	Remote Auto/ Stop Request	Remote Fan Mode Request
0	Disable	X	RT/CSC	SCC	FAN_ONLY[a]	X	Heat or MWU or Max HT	X	Cont	Local	Heat	Auto	On
0	Disable	X	RT/CSC	SCC	FAN_ONLY[a]	X	Cool	Cycling	X	Local	Heat	Auto	Auto
0	Disable	X	RT/CSC	SCC	FAN_ONLY[a]	X	Cool	Cont	X	Local	Heat	Auto	On
0	Disable	X	RT/CSC	SCC	FAN_ONLY[a]	X	Purge	X	X	Remote	Cool	Auto	On
0	Disable	X	RT/CSC	SCC	FAN_ONLY[a]	X	Precool	X	X	Remote	Cool	Auto	On
0	Disable	X	RT/CSC	SCC	FAN_ONLY[a]	X	Off or test or nul	X	X	Local	Heat	Auto	Auto
0	Disable	X	RT/CSC	SCC	FAN_ONLY[a]	X	Fan only	X	X	Local	Heat	Auto	Auto
0	Disable	X	RT/CSC	SCC	X	AUTO	Heat or MWU or Max HT	X	Cycling	Local	Heat	Auto	Auto
0	Disable	X	RT/CSC	SCC	X	AUTO	Heat or MWU or Max HT	X	Cont	Local	Heat	Auto	On
0	Disable	X	RT/CSC	SCC	X	AUTO	Cool	Cycling	X	Local	Heat	Auto	Auto
0	Disable	X	RT/CSC	SCC	X	AUTO	Cool	Cont	X	Local	Heat	Auto	On
0	Disable	X	RT/CSC	SCC	X	AUTO	Purge	X	X	Remote	Cool	Auto	On
0	Disable	X	RT/CSC	SCC	X	AUTO	Precool	X	X	Remote	Cool	Auto	On
0	Disable	X	RT/CSC	SCC	X	AUTO	Off or test or nul	X	X	Local	Heat	Auto	Auto
0	Disable	X	RT/CSC	SCC	X	AUTO	Fan only	X	X	Local	Heat	Auto	Auto
0	Disable	X	RT/CSC	SCC	X	Heat or MAX HT	X	X	Cycling	Remote	Heat	Auto	Auto
0	Disable	X	RT/CSC	SCC	X	Heat or MAX HT	X	X	Conti	Remote	Heat	Auto	On
0	Disable	X	RT/CSC	SCC	X	MWU	X	X	X	Remote	Heat	Auto	On
0	Disable	X	RT/CSC	SCC	X	COOL	X	cycling	X	Remote	Cool	Auto	Auto
0	Disable	X	RT/CSC	SCC	X	COOL	X	Cont	X	Remote	Cool	Auto	On
0	disable	X	RT/CSC	SCC	X	PURGE	X	X	X	Remote	Cool	Auto	On
0	Disable	X	RT/CSC	SCC	X	PRECOOL	X	X	X	Remote	Cool	Auto	On
0	Disable	X	RT/CSC	SCC	X	OFF	X	X	X	Local	Heat	Stop	Auto
0	Disable	X	RT/CSC	SCC	X	FAN_ONLY[a]	Heat or MWU or Max HT	X	Cycling	Local	Heat	Auto	Auto
0	Disable	X	RT/CSC	SCC	X	FAN_ONLY[a]	Heat or MWU or Max HT	X	Cont	Local	Heat	Auto	On
0	Disable	X	RT/CSC	SCC	X	FAN_ONLY[a]	Cool	Cycling	X	Local	Heat	Auto	Auto
0	Disable	X	RT/CSC	SCC	X	FAN_ONLY[a]	Cool	Cont	X	Local	Heat	Auto	On
0	Disable	X	RT/CSC	SCC	X	FAN_ONLY[a]	Purge	X	X	Remote	Cool	Auto	On
0	Disable	X	RT/CSC	SCC	X	FAN_ONLY[a]	Precool	X	X	Remote	Cool	Auto	On
0	Disable	X	RT/CSC	SCC	X	FAN_ONLY[a]	Off or test or nul	X	X	Local	Heat	Auto	Auto
0	Disable	X	RT/CSC	SCC	X	FAN_ONLY[a]	Fan only	X	X	Local	Heat	Auto	Auto
0	Disable	X	RT/CSC	SCC	X	X	Heat or MWU or Max HT	X	Cycling	Local	Heat	Auto	Auto

Table 123.Determination of Heat/Cool Mode, Fan Request, and Run Request (continued)

Input										Output			
Power up Control Wait Time	Local Switch Enable	Local Fan Mode	Unit Type	Profile	nviApplicMode	nviHeatCool (SCC)	nvoHeatCool	Fan Config Cooling	Fan Config Heating	Local/ Remote Heat/Cool Arbitration	Remote Heat/ Cool Request	Remote Auto/ Stop Request	Remote Fan Mode Request
0	Disable	X	RT/CSC	SCC	X	X	Heat or MWU or Max HT	X	Cont	Local	Heat	Auto	On
0	Disable	X	RT/CSC	SCC	X	X	Cool	Cycling	X	Local	Heat	Auto	Auto
0	Disable	X	RT/CSC	SCC	X	X	Cool	Cont	X	Local	Heat	Auto	On
0	Disable	X	RT/CSC	SCC	X	X	Purge	X	X	Remote	Cool	Auto	On
0	Disable	X	RT/CSC	SCC	X	X	Precool	X	X	Remote	Cool	Auto	On
0	Disable	X	RT/CSC	SCC	X	X	Off or test or nul	X	X	Local	Heat	Auto	Auto
0	Disable	X	RT/CSC	SCC	X	X	Fan only	X	X	Local	Heat	Auto	Auto
X	X	X	X	X	X	X	X	X	X	Local	Heat	Auto	Auto

(a) Refer to **nviAuxHeatEnable (SCC)**, **nviComprEnable (SCC)**, **nviPriCoolEnable (DAC)**, and **nviPriHeatEnable (DAC)** for more information on cooling and heating lockout arbitration.

Table 124.Local Fan Mode arbitration[(a)]

Input								Output
Occupancy Command	System Control	Supply Fan Bypass[(b)1]	System On/Off Status	NSB Panel Input Status	NSB Fan Request	Zone Sensor Fan Request	Default Supply Fan Mode	Local Fan Mode Arb
Occ	VAV w/ IGV/VFD or VAV w/o IGV/VFD	Bypass	1 = On	X	X	X	X	On
Occ	VAV w/ IGV/VFD or VAV w/o IGV/VFD	X	X	X	X	X	X	Auto
Occ	CV	X	X	Valid	On	X	X	On
Occ	CV	X	X	Invalid	X	On	X	On
Occ	CV	X	X	Invalid	X	Invalid	On	On
X	X	X	X	X	X	X	X	Auto

(a) **X** in any of the table fields denotes any state.
(b) **Supply Fan Bypass** column is **only** CSC.

Table 125.SCC Space Setpoint arbitration

1. Local Setpoint Arbitration From IPC Bus		
Default Occ Zone Cooling Setpoint Source	☞	Based on Default OCC Zone Cooling Setpoint Source
Default Occ Zone Heating Setpoint Source		localOccCool = RTM Cooling Setpoint
Default Unocc Zone Cooling Setpoint Source		localOccCool = =NSB Occ Zone Colling Setpoint
Default Unocc Zone Heating Setpoint Source		localOccCool = Default Occ Zone Cooling Setpoint
RTM Cooling Setpoint		localOccCool = GBAS 0–5V Occ Zone Cooling Setpoint
RTM Heating Setpoint		localOccCool = GBAS 0–10V Occ Zone Cooling Setpoint
NSB Occ Zone Cooling Setpoint[(a)]		Based on Default Unocc Zone Cooling Setpoint Source
NSB Occ Zone Heating Setpoint		localUnoccCool = RTM Cooling Setpoint
NSB Unocc Zone Cooling Setpoint		localUnoccCool = NSB Unocc Zone Cooling Setpoint
NSB Unocc Zone Heating Setpoint		localUnoccCool = Default Unocc Zone Cooling Setpoint
Default Occ Zone Cooling Setpoint		localUnoccCool = GBAS 0–5V Unocc Zone Cooling Setpoint
Default Occ Zone Heating Setpoint		localUnoccCool = GBAS 0–10V Unocc Zone Cooling Setpoint
Default Unocc Zone Cooling Setpoint		Based on Default Occ Zone Heating Setpoint Source
Default Unocc Zone Heating Setpoint		localOccHeat = RTM Heating Setpoint
GBAS 0–5V Occ Zone Cooling Setpoint		localOccHeat = NSB Occ Zone Heating Setpoint
GBAS 0–5V Unocc Zone Cooling Setpoint		localOccHeat = Default Occ Zone Heating Setpoint
GBAS 0–5V Occ Zone Heating Setpoint		localOccHeat = GBAS 0–5V Occ Zone Heating Setpoint
GBAS 0–5V Unocc Zone Heating Setpoint		localOccHeat = =GBAS 0–10V Occ Zone Heating Setpoint
GBAS 0–10V Occ Zone Cooling Setpoint		Based on Default Unocc Zone Heating Setpoint Source
GBAS 0–10V Occ Zone Heating Setpoint		localUnoccHeat = RTM Heating Setpoint
GBAS 0–10V Unocc Zone Cooling Setpoint		localUnoccHeat = NSB Unocc Zone Heating Setpoint
GBAS 0–10V Unocc Zone Heating Setpoint		localUnoccHeat = Default Unocc Zone Heating Setpoint
		localUnoccHeat = GBAS 0–5V Unocc Zone Heating Setpoint
		locaUnoccHeat = GBAS 0–10V Unocc Zone Heating Setpoint
2. Calibrate a Valid Local Setpoint (localcal)		
nciSensor1Cal; -10°F to 10°F (±5.56°C)	☞	localOccCoolCal = localOcccool + nciSensor1Cal
		localUnoccCoolCal = localUnoccColl + nciSensor1Cal
		localOccHeatCal = localOccHeat + nciSensor1Cal
		localUnoccHeatCal = localUnoccHeat + nciSensor1Cal
Based on nvoEffOccupancy Unit Heat/Cool Status		
nvoSetpoint = localOccCoolCal ***OR***	☜	localOccCoolCal = localOccCool
nvoSetpoint = localUnoccCoolCal ***OR***		locaUnoccCoolCal = localUnoccCool
nvoSetpoint = localOccHeatCal ***OR***		localOccHeatCal = localOccHeat
nvoSetpoint = locaUnoccHeatCal		localUnoccHeatCal = lcaoUnoccHeat
3. Check If OK to Use Valid Local Setpoint		
nciPersonality2 (local setpoint en/dis)	☞	If nciPersonality2.boolean.local_setpoint = enable
		setpointSource = local ***ELSE***
		setpointSource = none

(a) NSB Occ Zone Cooling Setpoint and NSB Occ Zone Heating Setpoint are not internally communicated by the RTM. Instead, use Default Occ Zone Cooling Setpoint and Default Occ Zone Heating setpoint.

Table 126.SCCSpace Setpoint arbitration (continued)

		4. Setpoint Arbitration
nviSetpoint	☞	If nviSetpoint ! = 7FFF (invalid)
50°F to 90°F (10°C to 35°C); clamp value to range		setpointSource = remote
		5. Calculate Absolute Offset (abs_offset)
Occupancy arbitration (nvoEffectOccup) [occupied, standby, bypass, unoccupied]	☞	If setpointSource = remote ***THEN***
		If nvoEffectOccup = standby ***THEN***
nciSetpoints; uc ≥ sc ≥ oc ≥ oh ≥ sh ≥ uh		abs_offset = nviSetpoint - ((sc + sh)/2)
occupied standby cool (sc)		***ELSE***
occupied cool (oc)	☞	abs_offset = nviSetpoint - ((oc + oh)/2) ***ELSE***
occupied heat (oh)		***ELSE***
occupied standby heat (sh)		abs_offset = 0
		6. Apply abs_offset to Occupied Setpoints
nciSetpoints; uc ≥ sc ≥ oc ≥ oh ≥ sh ≥ uh	☞	If setpointSource = local
unoccupied cool (uc)	☞	uc = Refer to Table 130, p. 111
occupied standby cool (sc)	☞	scao = Refer to Table 129, p. 111
occupied cool (oc)	☞	ocao = Refer to Table 129, p. 111
occupied heat (oh)	☞	ohao = Refer to Table 129, p. 111
occupied standby heat (sh)	☞	shao = Refer to Table 129, p. 111
unoccupied heat (uh)		uh = Refer to Table 130, p. 111
Order enforced by the Rover Service Tool		***ELSE*** // remote or none
115°F ≥ uc ≥ sc ≥ oc ≥ oh ≥ sh ≥ uh ≥ 40°F (46.11°C ≥ uc ≥ sc ≥ oc ≥ oh ≥ sh ≥ uh ≥ 4.44°C)		uc = uc
		scao = sc + abs_offset
		ocao = oc + abs_offset
		ohao = oh + abs_offset
		shao = sh + abs_offset
		uh = uh
		Setpoints are not limited.
		7. Apply nviSetptOffset to Occupied Setpoints
		uc = uc
		sco = scao + nviSetptOffset
		oco = ocap + nviSetptOffset
nvoSetptOffset	☞	oho = ohao + nviSetptOffset
10°C ≥ offset ≥ −10°C (±18°F)		uh = uh
		Setpoints are not limited.

Table 127.SCCSpace Setpoint arbitration (continued)

		8. Apply nviSetptShift to All Setpoints
nviSetptShift		
10°C ≥ uc_shift ≥ –10°C (±18°F)	☞	ucs = uc + uc_shift
10°C ≥ sc_shift ≥ –10°C (±18°F)	☞	scs = sco + sc_shift
10°C ≥ oc_shift ≥ –10°C (±18°F)	☞	ocs + oco + oc_shift
10°C ≥ oh_shift ≥ –10°C (±18°F)	☞	ohs = oho + oh_shift
10°C ≥ sh_shift ≥ –10°C (±18°F)	☞	shs = sho + sh_shift
10°C ≥ uh_shift ≥ –10°C (±18°F)	☞	uhs = uh + uh_shift
		Setpoints are not limited.
		9. Limit Occupied Setpoints
nciPersonality2		ucs = ucs
cool setpoint high limit (csphl)	☞	csphl ≥ scl ≥ cspll
cool setpoint low limit (cspll)	☞	csphl ≥ ocl ≥ cspll
heat setpoint high limit (hsphl)	☞	hsphl ≥ ohl ≥ hspll
heat setpoint low limit (hspll)	☞	hsphl ≥ shl ≥ hspll
115°F ≥ range ≥ 40°F (46.11°C to 4.44°C)		uhs = uhs
		10. Six (6) Active Space Setpoints
		ucs = active unoccupied cool setpoint
		sca = active standby cool setpoint
		oca = active occupied cool setpoint
		oha = active occupied heat setpoint
		sha = active standby heat setpoint
		uha = active unoccupied heat setpoint
		11. Determining Two (2) Active Setpoints
		acsp = active cool setpoint
		ahsp = active heat setpoint
Occupancy arbitration (nvoEffectOccup) [occupied, standby, bypass, unoccupied]	☞	If nvoEffectOccup = occupied or bypass ***THEN***
		acsp = oca
		ahsp = oha ***ELSE***
		If nvoEffectOccup = standby ***THEN***
LCI-I reports remote setpoints to RTM controller.	☞	acsp = sca
Remote Occ Unocc Zone Cooling Setpoint = acsp		ahsp = sha ***ELSE***
		Unoccupied
Remote Occ Unocc Zone Heating Setpoint = ahsp	☞	acsp = uca
		ahsp = uha

Table 128.SCCSpace Setpoint arbitration (continued)

		12. Determining One (1) Active_Space_Setpoint
Zone demand arbitration (zd) = nvoHeatCool	☞	If zd = cool THEN
		active_space_setpoint = acsp ELSE
		zd ! = cool
nvoEffectSetpt_active_space_setpoint	☜	active_space_setpoint = ahsp

Table 129.Local occupied setpoint arbitration

Input	Input	Input	Input	Output
Default_Occ_Zone_Cooling_Setpoint source	Default_Occ_Zone_Heating_Setpoint source	RTM_Zone_Sensor_Cooling_Setpoint	RTM_Zone_Heating_Setpoint	Local_Occupied_Setpoints[(a) (b) (c)]
0 = RTM	0 = RTM	OK	No present or failed.	• scao = localOccCoolCal + cso • ocao = localOccCoolCal • ohao = localOccCoolCal - do • shao = localOccCoolCal - do - hso
0 = RTM	0 = RTM	Not present or failed.	OK	• scao = localOccHeatCal + do + cso • ocao = localOccHeatCal + do • ohao = localOccHeatCal • shao = localOccHeatCal - hso
0 = RTM	0 = RTM	Not present or failed.	Not present or failed.	• scao = nciSetpoints.standby_cool • ocao = nciSetpionts.occupied_cool • ohao = nciSetpoints.occupied_heat • shao = nciSetpoints.standby_heat
0 = RTM	0 = RTM	OK	OK	• scao = localOccCoolCal + cso • ocao = localOccCoolCal • ohao = localOccHeatCal • shao = localOccHeatCal - hso
X = Do Not Care	X = Do Not Care	X = Do Not Care	X = Do Not Care	scao = localOccCoolCal

(a) deadband_occupied (do) = nciSetpoints_occupied_cool - nciSetpoints_occupied_heat
(b) heat_standby_offset (hso) = nciSetpoints_occupied_heat - nciSetpoints_standby_heat
(c) cool_standby_offset (cso) = nciSetpoints_standby_cool - nciSetpoint_occupied_cool

Table 130.Local unoccupied setpoint arbitration

Input	Input	Input	Input	Output
Default_Unocc_Zone_Cooling_Setpoint source	Default_Unocc_Zone_Heating_Setpoint source	RTM_Zone_Sensor_Cooling_Setpoint	RTM_Zone_Heating_Setpoint	Local_Unoccupied_Setpoints
RTM	RTM	No present or failed.	No present or failed.	• uc = nciSetpoints.unoccupied • uh = nciSetpoints.unoccupied
X = Do Not Care	X = Do Not Care	X = Do Not Care	X = Do Not Care	• uc = localUnoccCoolCal • uh = localUnoccHeatCal

The following output arbitration logic apples to the following network variables:

- nvoLocalSpaceTmp *(only SCC)*
- nvoSpaceTemp *(SCC and DAC)*

Note: *If nviSpaceTemp isvalid, nvoSpaceTemp is used and if nviSpaceTemp is invalid, refer to the following table.*

Table 131.Local Space Temperature arbitration

Input	Input	Input	Output
If...	*Temp Sensor Source...*	*...and Temp Sensor is...*	*Then Resulting Local Space Temperature Arbitration is...*

Table 131.Local Space Temperature arbitration

Input	Input	Input	Output
Monitor Temp Source is selected.	Monitor Temp Source = RTM	OK	RTM Zone Temp
		Failed	Invalid
	Monitor Temp Source = NSB	OK	NSB Temp
		Failed	Invalid
	Monitor Temp Source = RTM Aux	OK	RTM Aux Temp
		Failed	Invalid
	Monitor Temp Source = MWU	OK	MWU Temp
		Failed	Invalid
	Monitor Temp Source = ECEM	OK	Return Air Temp
		Failed	Invalid
• Unit Type = FAU • Drying Mode = Active • Reheat Reset Type = Zone • Unit State = VAV Occupied	Occ Zone Temp Source = RTM	OK	Occ Zone Temp
		Failed	Invalid
	Occ Zone Temp Source = NSB	OK	Occ Zone Temp
		Failed	Invalid
	Occ Zone Temp Source = RTM Aux	OK	Occ Zone Temp
		Failed	Invalid
	Occ Zone Temp Source = MWU	OK	Occ Zone Temp
		Failed	Invalid
	Occ Zone Temp Source = ECEM	OK	Occ Zone Temp
		Failed	Invalid
• Unit Type = FAU • Drying Mode = Active • Reheat Reset Type = Zone • Unit State = VAV Unoccupied	Unocc Zone Temp Source = RTM	OK	Unocc Zone Temp
		Failed	Invalid
	Unocc Zone Temp Source = NSB	OK	Unocc Zone Temp
		Failed	Invalid
	Unocc Zone Temp Source = RTM Aux	OK	Unocc Zone Temp
		Failed	Invalid
	Unocc Zone Temp Source = MWU	OK	Unocc Zone Temp
		Failed	Invalid
	Unocc Zone Temp Source = ECEM	OK	Unocc Zone Temp
		Failed	Invalid
Unit State = MWU	MWU Temp Source = RTM	OK	RTM Zone Temp
		Failed	Invalid
	MWU Temp Source = NSB	OK	NSB Temp
		Failed	Invalid
	MWU Temp Source = RTM Aux	OK	RTM Aux Temp
		Failed	Invalid
	MWU Temp Source = MWU	OK	MWU Temp
		Failed	Invalid
	MWU Temp Source = ECEM	OK	Return Air Temp
		Failed	Invalid

Table 131.Local Space Temperature arbitration

Input	Input	Input	Output
Unit State = DWU	DWU Temp Source = RTM	OK	RTM Zone Temp
		Failed	Invalid
	DWU Temp Source = NSB	OK	NSB Temp
		Failed	Invalid
	DWU Temp Source = RTM Aux	OK	RTM Aux Temp
		Failed	Invalid
	DWU Temp Source = MWU	OK	MWU Temp
		Failed	Invalid
	DWU Temp Source = ECEM	OK	Return Air Temp
		Failed	Invalid
Unit State = Unoccupied	Unocc Zone Temp Source = RTM	OK	RTM Zone Temp
		Failed	Invalid
	Unocc Zone Temp Source = NSB	OK	NSB Temp
		Failed	Invalid
	Unocc Zone Temp Source = RTM Aux	OK	RTM Aux Temp
		Failed	Invalid
	Unocc Zone Temp Source = MWU	OK	MWU Temp
		Failed	Invalid
	Unocc Zone Temp Source = ECEM	OK	Return Air Temp
		Failed	Invalid
• Unit Control = VAV • Active Cool Reset = Zone • Active Heat Reset Type = Outdoor Air or Zone	Zone Reset Temp Source = RTM	OK	RTM Zone Temp
		Failed	Invalid
	Zone Reset Temp Source = NSB	OK	NSB Temp
		Failed	Invalid
	Zone Reset Temp Source = RTM Aux	OK	RTM Aux Temp
		Failed	Invalid
	Zone Reset Temp Source = MWU	OK	MWU Temp
		Failed	Invalid
	Zone Reset Temp Source = ECEM	OK	Return Air Temp
		Failed	Invalid
Unit Control = CV	Occ Zone Temp Source = RTM	OK	RTM Zone Temp
		Failed	Invalid
	Occ Zone Temp Source = NSB	OK	NSB Temp
		Failed	Invalid
	Occ Zone Temp Source = RTM Aux	OK	RTM Aux Temp
		Failed	Invalid
	Occ Zone Temp Source = MWU	OK	MWU Temp
		Failed	Invalid
	Occ Zone Temp Source = ECEM	OK	Return Air Temp
		Failed	Invalid

Glossary

A

Active Setpoint
The setpoint that is currently being used for control. Occupied/unoccupied heating/cooling setpoints are selected according to unit mode and occupied/unoccupied switching functions.

B

BAS
Building Automation System.

C

CSC
Commercial Self-contained.

CV
Constant Volume.

D

DAC
Discharge Air Controller (LonMark™ profile).

DACX
Discharge Air Controller Extension (Trane™).

Daytime Warm-up
Applies to VAV units. Refers to a zone warm-up cycle that occurs when the zone temperature falls to a predetermined value.

Deadband
As applied to discharge air temperature control, this refers to a range of temperature equally spaced above and below the discharge air temperature control point in which the control algorithm is satisfied. There is no adjustment of machine capacity within the deadband.

E

ECEM
Exhaust/comparative enthalpy module.

Emergency Stop input
RTM binary input. Can be used for emergency shutdown of the unit by field-installed contacts. A diagnostic is produced when this input is open.

Enthalpy
A measure of the heat content or total heat, including both sensible and latent heat, measured in Joules (J) or British thermal units (Btu).

H

HI
Human Interface.

HrtBt
Heartbeat.

I

IGV
Inlet Guide Vanes.

I/O
Input/output.

IPC
Interprocessor Communications.

IWC
Inches Water Column.

M

MCM
Multiple Circuit Compressor Module.

Minimum Position
Also known as economizer minimum position.

MWU
Morning Warm-up.

N

NSB
Night setback which applies to the control of heating and cooling operation of a rooftop unit during unoccupied mode.

NV
Network Variable.

nvi
Network Variable Input.

nvo
Network Variable Output.

O

OA

Outdoor Air.

OA Reset
A function that resets (*modifies*) the Supply Air Temperature Cooling (*or Heating*) Setpoint based on the outside air temperature.

P

Pa
.Pascals

Purge
A function which causes zone air to be purged and replaced by outside air.

R

Reference Enthalpy
An outdoor enthalpy value above which economizing is disabled.

RA
Return Air.

Remote Human Interface (Remote HI)
A human interface module design to be mounted remotely from the unit. There are some functional differences between a machine and remote HI.

RT
Rooftop systems and rooftop air handlers.

RT1
IntelliPak I rooftop units manufactured before March 2009.

RT2
All IntelliPak II units and IntelliPak I+ units manufactured after March 2009.

RTM
Rooftop Module– contains I/Os for most air-handling functions.

S

SCC
Space Comfort Controller (LonMark profile).

SCCX
Space Comfort Controller Extension (Trane).

SCM
Single Circuit Compressor Module.

SCPT
Standard Configuration Property Type.

SNVT
Standard Network Variable Type.

SPID
Standard Program Identification.

Statitrac™
Trane trademark for control of space pressurization.

SA
Supply Air.

U

UCPT
User-defined configuration property type.

V

VAV
Variable-air-volume.

VCM
Ventilation Control Module.

VOM
Ventilation Override Module.

X

XIF
External Interface File.

Z

Zone Reset
A function that resets (*modifies*) the supply air temperature cooling (*or heating*) setpoint based on the zone temperature.

Trane - by Trane Technologies (NYSE: TT), a global climate innovator - creates comfortable, energy efficient indoor environments for commercial and residential applications. For more information, please visit trane.com or tranetechnologies.com.

Trane has a policy of continuous product and product data improvement and reserves the right to change design and specifications without notice. We are committed to using environmentally conscious print practices.

BAS-SVP02D-EN 12 May 2020
Supersedes BAS-SVP02C-EN (May 2012)

©2020 Trane